CAME

CAME.COM/UK

STYLOS-P24 KIT

Complete kit for a pair of swing gates weighing up to 100kg per leaf / max. width 1.8m

QUICK SETUP GUIDE

Typical gate setup & geometry
Gate motor manual release
Kit wiring diagram
Control panel guide & safety

TO BE READ IN CONJUNCTION WITH THE FULL INSTRUCTION MANUAL

CONTENTS

CAME

1 Kit Contents
2 Safety Instructions
3 Typical Gate Setup
4 Geometry
5 Manual Release Instructions
6 Kit Wiring Diagram
7 Control Panel: Quick Start Guide
8 Control Panel: Programming Transmitters
9 Control Panel: Safety
10 Optional Accessories

STYLOS-P24: KIT CONTENTS

STYLO-ME
Motor

STYLO-BD
Articulated Drive Arm

ZL92Z
Control Panel

AF43S
Radio Frequency Card

TOPD4RKS
Rolling code Transmitter

TOP-A433N
Tuned Antenna

DIR10
Pair of Photocells

SAFETY INSTRUCTIONS

CAME

When correctly installed in compliance to installation instructions and adhering to all current electrical, mechanical and manufacturer regulations, your automation system will provide a high degree of safety and problem free operation.

Please take note of the following warnings that must be followed in order to prevent accidents during your gate operation:

- Do not allow children to play near the gate.
- Keep all remote control operating devices out of the reach of children.
- Do not pass through the gate whilst in operation. Wait until they are fully open before passing through.
- Do not stop unnecessarily when passing through the gate.
- Keep feet away from the bottom of the gate during operation.
- Do not operate the gate by remote control unless they are in view.
- Do not attempt to block or interfere with the gate movement during operation.
- Under no circumstances should you attempt to modify the gate automation system.
- Ensure that your gate is serviced at 3 to 12 month intervals (dependent on number of openings) by your installation/maintenance company.
- Report any signs of malfunction to your installation/maintenance company immediately.
- In the case of malfunction, isolate the power supply, release any additional locking mechanism, manually open the gate (see manual release instruction booklet) and call your installation/maintenance company.
- If you are in any doubt regarding the operation of your gate, call your installation/maintenance company.

STYLO: TYPICAL GATE SETUP

CAME

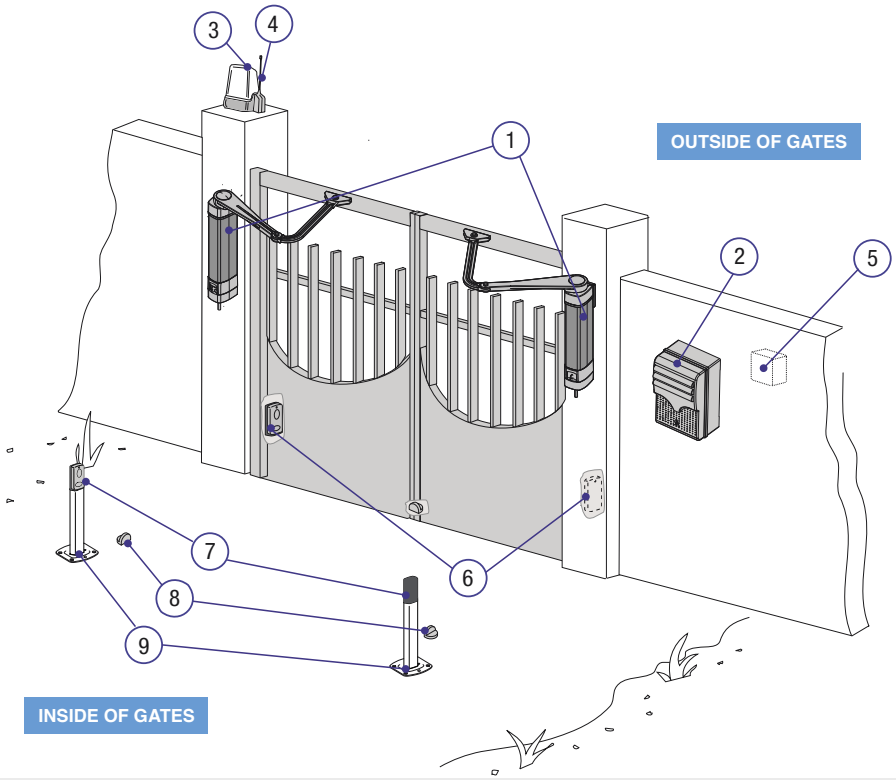

1	STYLO Motor	**4**	Flashing Light (optional)	**7**	2nd set of Photocells (optional)
2	Control Panel	**5**	Selector Keypad (optional)	**8**	Mechanical End Stop (not supplied)
3	Reception Antenna	**6**	Photocells (on outside of gate posts)	**9**	Photocell column (optional accessory)

CONTROL PANEL

- The control panel should be mounted in an accessible position and not directly behind the gates, to avoid a potential crushing hazard.
- Use cable glands to connect the devices to the control panel. One of these must be used exclusively for the power supply cable.
- All holes should be sealed to avoid ingression and maintain the IP54 protection rating.

ONLY A COMPETENT SERVICE PROVIDER SHOULD OPEN THE ENCLOSURE AND ADJUST THE SETTINGS.

PHOTOCELLS

- The photocells are used in pairs, one transmitter and one receiver.
- They should be installed between 500-600mm from the ground, facing each other.
- Power for the photocells is taken from the control panel 24v AC.
- The maximum range of the photocell should always be observed.

When the photocell beam is broken, the control panel can be programmed on how to react. Please see 'Safety' section for more information.

STYLO-BD: GEOMETRY

CAME

PRELIMINARY CHECKS

Tick

1. Check that the gate structure is sturdy enough, the hinges work efficiently and that there is no friction between the fixed and moving parts ☐
2. Make sure that measurement **C** does not exceed the value shown in the reference table ☐
3. Make sure that you have fitted opening and closing mechanical gate stops ☐

SIDE HUNG GATE GEOMETRY: STYLO-ME / STYLO-BD

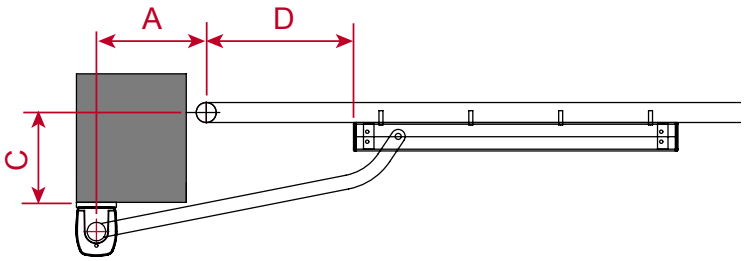

- The greater the motor angle, the greater the opening speed and the slower the gear motor's thrust.
- The smaller the motor angle, the slower the opening speed and the greater the gear motor's thrust.

Opening	A (mm)	C (mm)	D (mm)
90°	90	0÷200	400
90°	230	180	300
135°	230	0	300

OUTWARD OPENING GATES

For outward opening gate geometry please refer to the full Installation Manual.

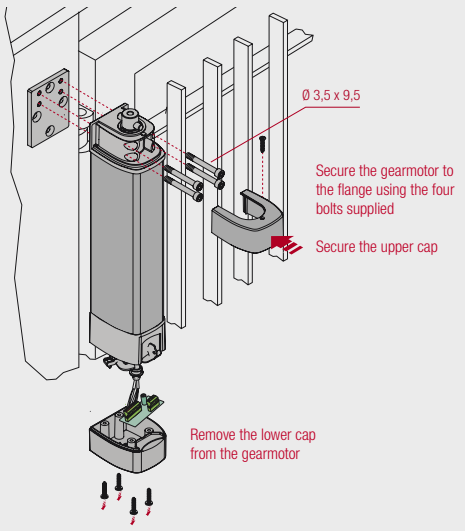

Securing the transmission arm

1. Assemble the slide guide to the transmission arm as shown in the drawing (1).
2. Insert the guide into the rail (2).
3. Assemble the straight arm onto the gearmotor shaft (3). Cover the hole with the cap and secure it using the supplied screws (4).
4. Insert the end caps of the rail and the hole covers (5)

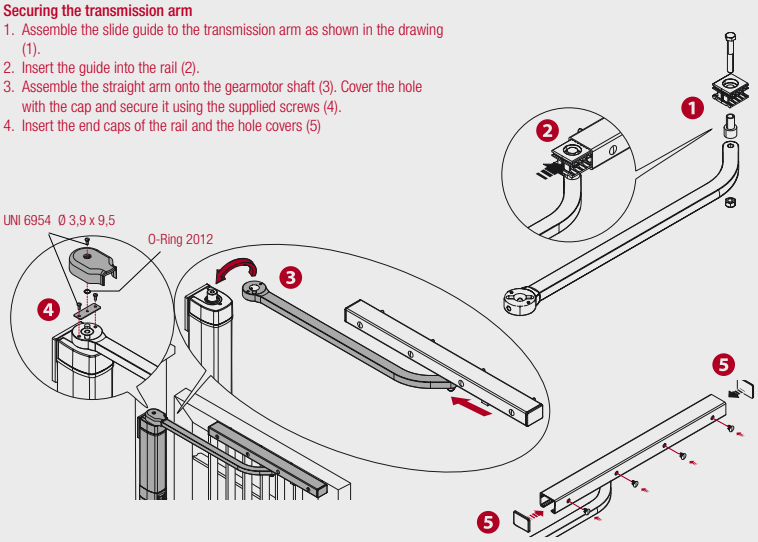

STYLO: MANUAL RELEASE

CAME

The STYLO straight arm swing gate operator has a release mechanism located behind the hatch at the bottom of the unit.

TO MANUALLY RELEASE THE NON-REVERSIBLE GEARMOTOR:

1. Slide open the hatch covering the lock **A**
2. Insert key into lock and turn until it clicks **B**
3. With your other hand firmly open the gate. The gate should be manually released. Now fully open the gate carefully at the same speed as the automatic operator.
4. To re-engage, close the gate and turn the key back to its original position. Attempt to manually move the gate to ensure it is fully engaged.

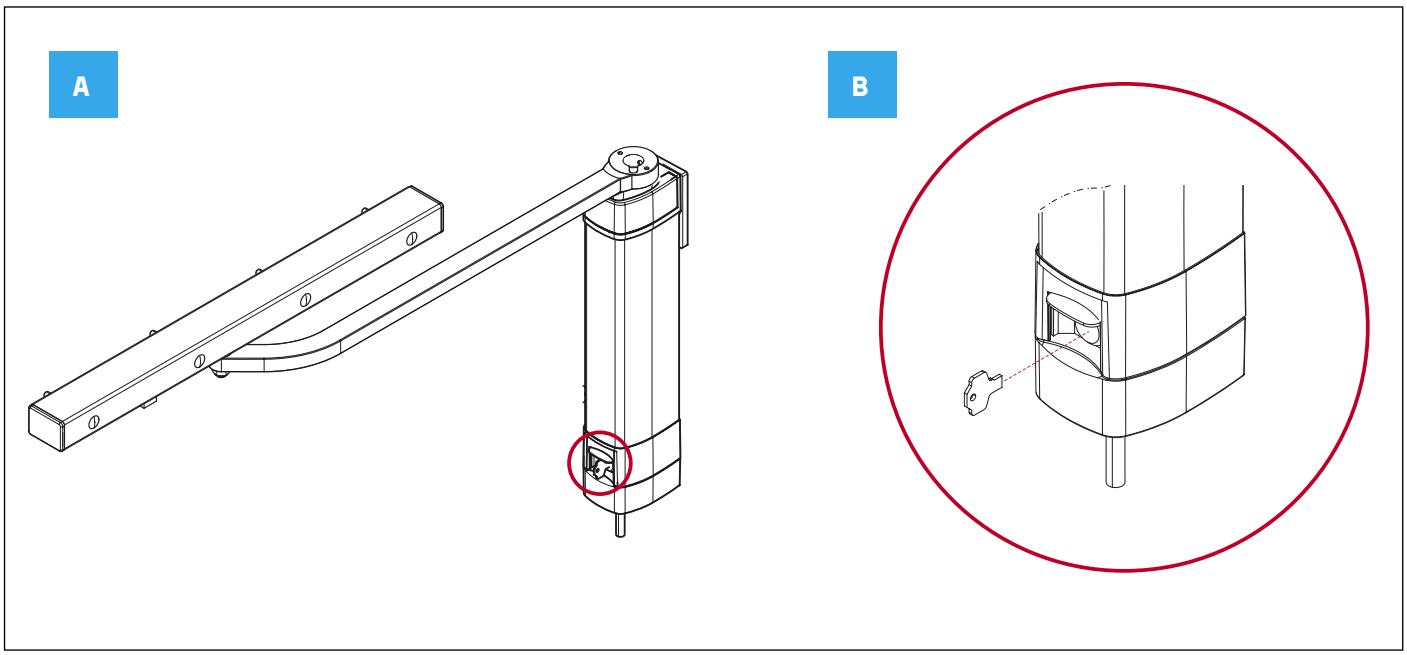

ALWAYS isolate the power supply as instructed by your installer (even in a power cut).

Release any additional locking device fitted to the gate (eg. electric lock etc).

BASIC MAINTENANCE: HINTS & TIPS

- Slide back manual release cover & spray locking mechanism with suitable penetrating lubricant.
- Lubricate gate hinges.
- Manually release the gates at least once per month.

STYLOS-P24: WIRING DIAGRAM

CAME

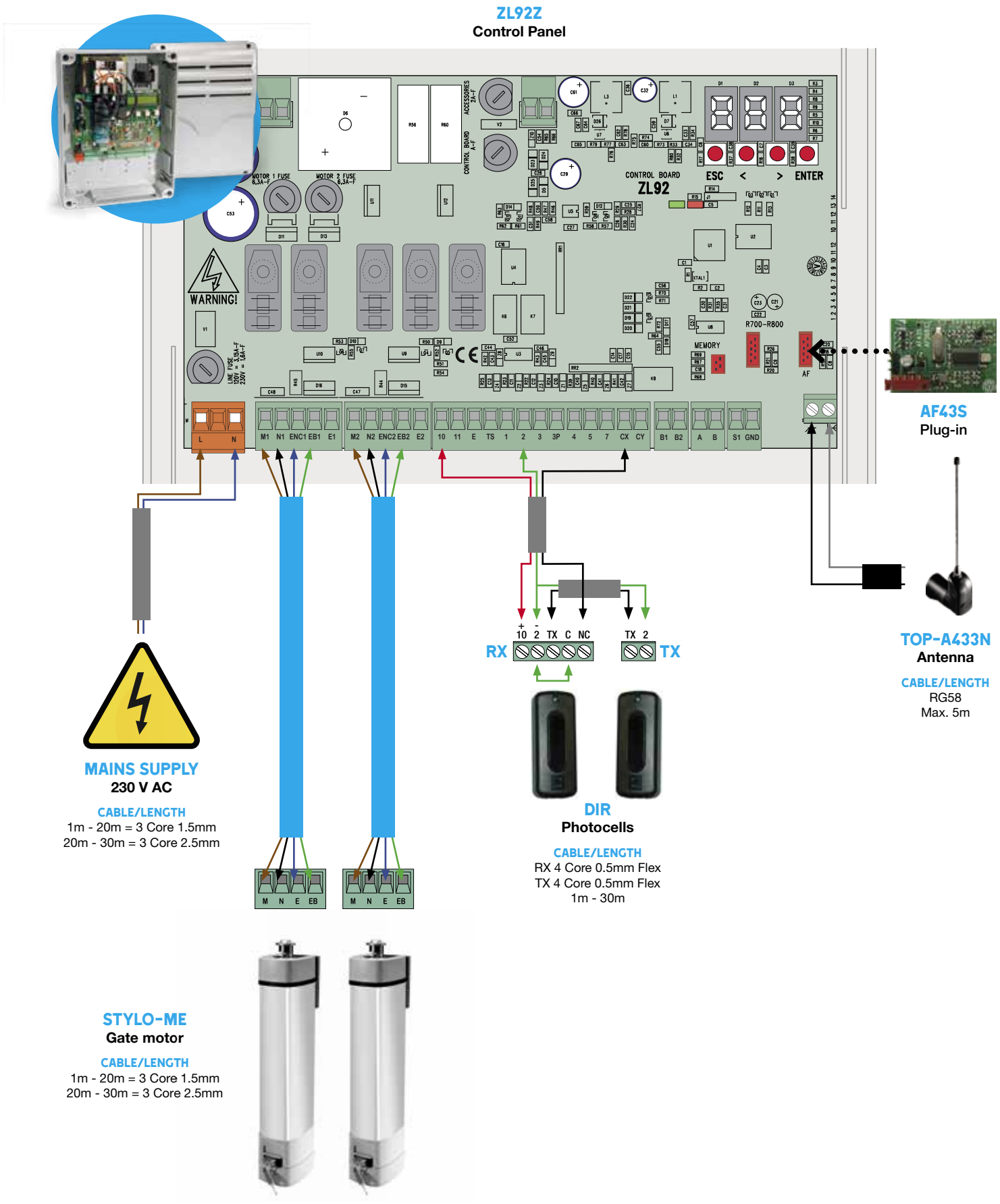

ZL92Z: QUICK START GUIDE

CAME

IMPORTANT!

THE INSTALLATION MUST BE CARRIED OUT BY SKILLED AND QUALIFIED PERSONNEL

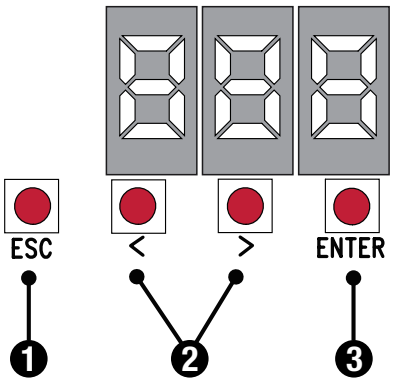

1. **ESC** button - used to perform the following operations:
   - Exit the menu
   - Delete the changes
   - Go back to the previous screen
2. **>** buttons - used to perform the following operations:
   - Navigate the menu
   - Increase or decrease values
3. **ENTER** button - used to perform the following operations
   - Access menus
   - Confirm a choice

Ensure the wiring is complete (refer to the wiring diagram) & any required physical stops are set before commencing with programming

		Tick
1.	Power on the control panel	☐
2.	Press and hold the **ENTER** button for 2 seconds to access programming. (F 1 appears on the display).	☐
3.	Disable total stop – F 1 – 0	☐
4.	Disable safety inputs – F 2 & F 3 – 0	☐
5.	Disable safety test – F 5 – 0	☐
6.	Set the number of motors – F 4 6 – 0	☐
7.	Set the motor type – A 1 – 2	☐
	CAUTION, Ensure the gate movement area is clear of all obstructions	
8.	Check the motor direction A 2 – 1	☐
	For motor 2, press and hold > The gate should open, if not reverse the motor cables for motor 2 (Connections M2, N2) Leave the gate in the halfway position.	☐
	For motor 1, press and hold < The gate should open, if not reverse the motor cables for motor 1 (Connections M1, N1) Leave the gate in the halfway position.	☐
9.	Setup the Encoder A 3 – 1	☐
10.	The Gates will now perform a close and open cycle.	☐
12.	Exit the programming using the **ESC** button.	☐
13.	Check the gate operation by pulsing across connections 2 & 7, the gate will close	☐

Please refer to the main manual for:
Changing automatic closing time, adjusting encoder settings if required

SAFETY INPUTS SHOULD NOW BE CONFIGURED AND THE GATE FORCE TESTED AS REQUIRED. PLEASE REFER TO THE FULL MANUAL TO COMPLETE THE COMMISSIONING.

SHOULD THE GATES NOT OPERATE AS SUGGESTED ABOVE, CALL CAME HELPLINE 0115 921 0430 FOR TECHNICAL SUPPORT.

ZL92: TRANSMITTERS

CAME

Ensure the AF card is fitted (refer to the wiring diagram).

ADD TRANSMITTER BUTTON

1. Press and hold the ENTER button for 2 seconds to access programming. (F 1 appears on the display).
2 Add a transmitter button - U 1
3 Choose the function to be assigned to the button

1 Step-by-step
2 Sequential
3 Open
4 Partial opening
5 B1 + B2

A flashing number will now appear on the screen.

Press and release a button on a transmitter, the number on the screen will increment by one for each button pressed.

A maximum of 25 individual buttons can be saved

REMOVE TRANSMITTER BUTTON

1 Press and hold the ENTER button for 2 seconds to access programming. (F1 appears on the display).
2 Remove a transmitter button - U 2
3 Use the arrow buttons to choose the number associated with the transmitter button you wish to remove.
"C L r" will appear to confirm deletion

DELETE ALL TRANSMITTERS

1 Press and hold the ENTER button for 2 seconds to access programming. (F1 appears on the display).
2 Remove all transmitters – U 3 – 1

All transmitters will be deleted.

SHOULD THE TRANSMITTER NOT OPERATE AS SUGGESTED ABOVE, CALL CAME HELPLINE 0115 921 0430 FOR TECHNICAL SUPPORT.

ZL92Z: SAFETY

CAME

SAFETY INPUTS

FUNCTIONS > CX Input, CY Input

C1 REOPENING DURING CLOSING

- When the automation is in its closing cycle and the safety circuit is triggered the automation will stop and reverse its motion until it reaches its fully open position again.
- If the auto closing option is enabled and the safety is no longer triggered the auto closing countdown will commence, once completed the automation will start the closing cycle again.
- If the auto closing option is not enabled the automation will return to the fully open position awaiting another activation from a command device.

C2 RECLOSING DURING OPENING

- When the automation is in its opening cycle and the safety circuit is triggered the automation will stop and reverse its motion until it reaches its fully closed position again.
- Once the automation has reached the fully closed position it will require another activation from a command device to restart.

C3 PARTIAL STOP

- When the automation is in its opening cycle and the safety circuit is triggered the automation will stop.
- If the auto closing option is enabled and the safety is no longer triggered the auto closing countdown will commence, once completed the automation will start closing the device.

C4 OBSTRUCTION WAIT

- When the automation is in either its opening or closing cycle and the safety circuit is triggered the automation will stop.
- Once the safety is no longer triggered the automation will carry on the cycle it was performing at the time it was interrupted.

SENSITIVE EDGES

C7 REOPENING DURING CLOSING

- When the automation is in its closing cycle and the safety circuit is triggered the automation will reverse its motion until it reaches its fully open position again.
- If the auto closing option is enabled and the safety is no longer triggered the auto closing countdown will commence, once completed the automation will start the closing cycle again.
- If the auto closing option is not enabled the automation will return to the fully open position awaiting another activation from a command device.

C8 RECLOSING DURING OPENING

- When the automation is in its opening cycle and the safety circuit is triggered the automation will reverse its motion until it reaches its fully closed position again.
- Once the automation has reached the fully closed position it will require another activation from a command device to restart.

The above sequence will be attempted 3 times before the automation is halted, the automation will then require activation from a command device to restart.

If during the reverse motion a different safety is triggered the automation will perform the appropriate action for the new triggered safety, should multiple safeties be triggered at the same time the automation will be halted at its current position.

STYLOS-P24: ACCESSORIES

CAME

	Code(s)	Description
RADIO KEYPAD SELECTORS		
	806SL-0170	SELT1W4G - Surface-mounted, 433.92 MHz radio-frequency keypad selector, 12-keys, with blue backlighting. 25 savable codes and password to access the programming mode. Settable in Rolling Code or Fixed Code mode. RAL7024 Grey colour.
	806SL-0180	SELT1W8G - Surface-mounted, 868.35 MHz radio-frequency keypad selector, 12-keys, with blue backlighting. 25 savable codes and password to access the programming mode. Settable in Rolling Code or Fixed Code mode. RAL7024 Grey colour.
	001**AF868**	Plug-in 868.35 MHz radio frequency control card. **Required for 806SL-0180.**
BLUETOOTH SELECTORS		
	806SL-0210	SELB1SDG1 - Surface-mounted with blue backlighting, for 15 users. RAL7024 Grey colour.
	806SL-0240	SELB1SDG2 - Surface-mounted with blue backlighting, for 50 users. RAL7024 Grey colour.
	806SL-0250	SELB1SDG3 - Surface-mounted with blue backlighting, for 250 users. RAL7024 Grey colour.
TRANSPONDER SELECTORS		
	806SL-0300	SELR1BDG - Surface-mounted Bus transponder reader for cards, keyfobs and TAG (Manchester protocol) with blue backlighting. RAL7024 Grey colour.
	806SL-0310	SELR2BDG - Flush-mounted Bus transponder reader for cards, keyfobs and TAG (Manchester protocol) with blue backlighting. RAL7024 Grey colour.
	001**R700**	Programming board and access control management when used with transponder. **Required for 806SL-0300 and 806SL-0310.**
HARDWIRED KEYPAD SELECTORS		
	806SL-0280	SELT1BDG - Surface-mounted 12 button Bus keypad with blue backlighting. RAL7024 Grey colour.
	806SL-0290	SELT2BDG - Flush-mounted 12 button Bus keypad with blue backlighting. RAL7024 Grey colour.
	001**R800**	Control board for programming and access-control management via keypad selectors. **Required for 806SL-0280 and 806SL-0290.**
TOP - ROLLING CODE		
	8K06TS-001	TOPD4RXM - 6 packaged dual frequency 4 button rolling code transmitters. 4,294,967,896 combinations.
PHOTOCELLS		
	Surface mounted. Synchronised beam, multiple pairs of photocells can be applied to the same system, even at double height and/or close to each other - with no interference issues (cross talk).	
	001**DIR10**	Pair of 12 - 24 V AC - DC outdoor photocells - range 10m.
	001**DIR20**	Pair of 12 - 24 V AC - DC outdoor photocells - range 20m.
	001**DIR30**	Pair of 12 - 24 V AC - DC outdoor photocells - range 30m.
PHOTOCELL COLUMN		
	001**DIRL**	Natural finish aluminium post. H = 500mm
	001**DIRLN**	Black anodised aluminium post. H = 500mm
	001**DIRCG**	Silver RAL9006, PVC post. H = 500mm

FOR MORE KIT ACCESSORIES PLEASE CONTACT SALES ON 0115 9210 430

CAME

CAME BPT - North
Unit 1B
Sills Road
Willow Farm Business Park
Castle Donington
DE74 2US

Tel: 0115 921 0430

CAME BPT - South
Liberta House
Maxted Road
Maylands Ind. Est.
Hemel Hempstead
Herts
HP2 7DX

Tel: 01442 230 800

CAME BPT - Ireland
Unit 9
The Westway Centre
Ballymount
Dublin 12

Tel: +353 (0)1 450 7442

CE

© STYLOSP24QS1021 - 2021 - EN
YOU MAY NOT EVEN PARTIALLY REPRODUCE THIS DOCUMENT
CAME RESERVES THE RIGHT TO MAKE ANY CHANGES TO THIS DOCUMENT AT ANY TIME
THE DATA AND INFORMATION SHOWN IN THIS CATALOGUE ARE SUBJECT TO CHANGE WITHOUT OBLIGATION TO GIVE PRIOR NOTICE BY CAME S.P.A, E&OE

CAME S.p.A.
Came cancelli automatici S.p.A.
is certified for Quality and Environment
UNI EN ISO 9001
UNI EN ISO 14001
BS OHSAS 18001

CAME.COM/UK