CAME

CAME.COM/UK

BK-1800
KIT

Complete kit for a sliding gate weighing
up to 1800kg / max. width 20m

QUICK SETUP GUIDE

TO BE READ IN CONJUNCTION WITH THE FULL INSTRUCTION MANUAL

CONTENTS

CAME

1 Kit Contents
2 Safety Instructions
3 Typical Gate Setup
4 Geometry
5 Manual Release Instructions
6 Wiring Diagram
7 Pre-installed SIM Card
8 Initial Power On
9 Commissioning the RGSM
10 Commissioning via App
11 Commissioning via Panel
12 Safety Options
13 Replacing the SIM Card
14 Optional Accessories

BK-1800: KIT CONTENTS

BKS18AGS
Motor with built-in ZBKN control panel

AF43S
Radio Frequency Card

TOPD4RKS
Rolling code Transmitter

TOP-A433N
Tuned Antenna

DIR10
Pair of Photocells

RSE
Connection Card

RGSM001S
Gateway Module

SIM
May be preinstalled in RGSM001S

2 SAFETY INSTRUCTIONS

CAME

When correctly installed in compliance to installation instructions and adhering to all current electrical, mechanical and manufacturer regulations, your automation system will provide a high degree of safety and problem free operation.

Please take note of the following warnings that must be followed in order to prevent accidents during your gate operation:

- Do not allow children to play near the gate.
- Keep all remote control operating devices out of the reach of children.
- Do not pass through the gate whilst in operation. Wait until they are fully open before passing through.
- Do not stop unnecessarily when passing through the gate.
- Keep feet away from the bottom of the gate during operation.
- Do not operate the gate by remote control unless they are in view.
- Do not attempt to block or interfere with the gate movement during operation.
- Under no circumstances should you attempt to modify the gate automation system.
- Ensure that your gate is serviced at 3 to 12 month intervals (dependent on number of openings) by your installation/maintenance company.
- Report any signs of malfunction to your installation/maintenance company immediately.
- In the case of malfunction, isolate the power supply, release any additional locking mechanism, manually open the gate (see manual release instruction booklet) and call your installation/maintenance company.
- If you are in any doubt regarding the operation of your gate, call your installation/maintenance company.

3 TYPICAL GATE SETUP

CAME

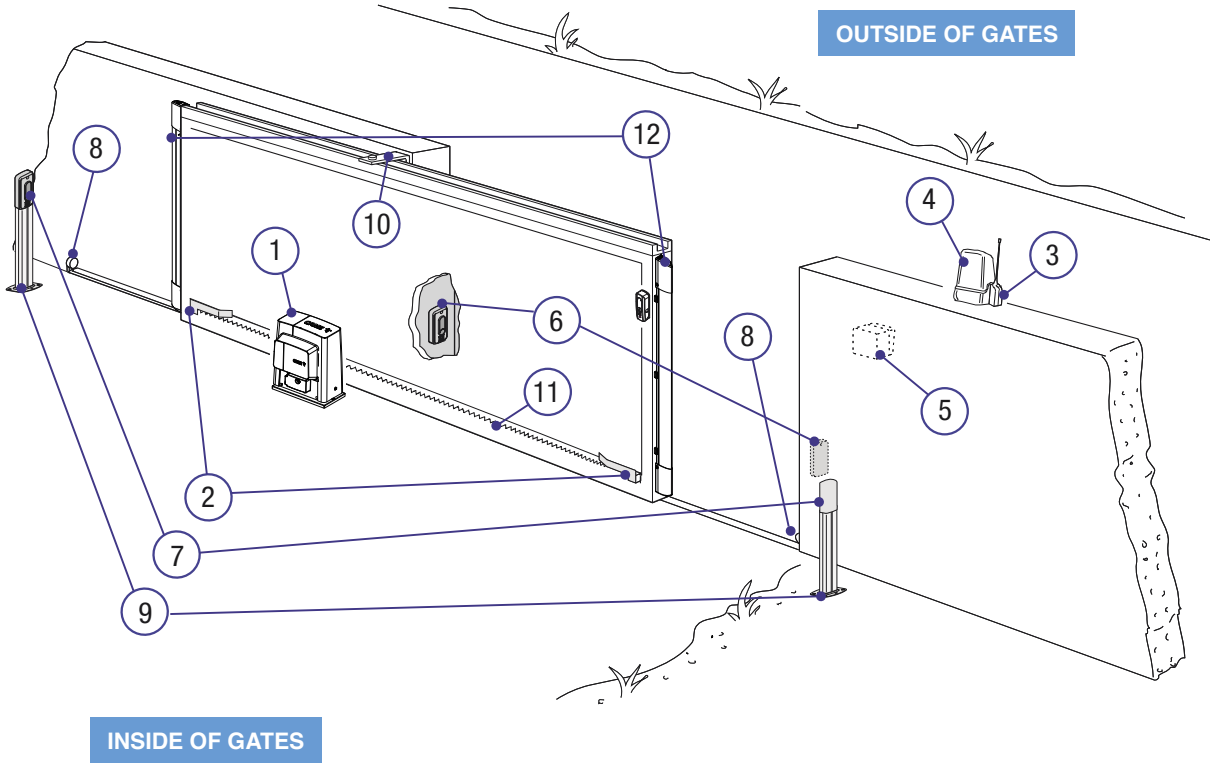

1	BK Motor	**5**	Selector Keypad (optional)	**9**	Photocell column (optional accessory)
2	Limit switch fins	**6**	Photocells (on outside of gate posts)	**10**	Slide guides
3	Reception Antenna	**7**	2nd set of Photocells (optional)	**11**	Rack
4	Flashing Light (optional)	**8**	Mechanical End Stop (not supplied)	**12**	Sensitive safety-edge

CONTROL PANEL

- The control panel is integral to the motor and is accessed by removing the outer cover.
- The control panel is protected by a board-protection cover which will need to be removed for initial wiring.

ONLY A COMPETENT SERVICE PROVIDER SHOULD OPEN THE ENCLOSURE AND ADJUST THE SETTINGS.

PHOTOCELLS

- The photocells are used in pairs, one transmitter and one receiver.
- They should be installed between 500-600mm from the ground, facing each other.
- Power for the photocells is taken from the control panel 24v AC.
- The maximum range of the photocell should always be observed.

When the photocell beam is broken, the control panel can be programmed on how to react. Please see 'Safety' section for more information.

4 GEOMETRY

CAME

PRELIMINARY CHECKS

Tick

1. Ensure that all surfaces are perfectly level (Do not install on slopes) ☐
2. Foundation frame dug out ☐
3. Set up the corrugated tubes needed for the wiring coming out of the junction pit. ☐
4. Use Ø 40 mm corrugated tubes to connect the gearmotor to the accessories ☐
5. Prepare a Ø 20 mm tube to run the release cord through A. ☐
6. Use Ø 40 mm corrugated tubes to connect the gearmotor to the accessories ☐
   The number of tubes depends on the type of system and the accessories that are going to be fitted

GATE GEOMETRY

Max Leaf Length (m)	Max Leaf Weight (kg)
20	1800

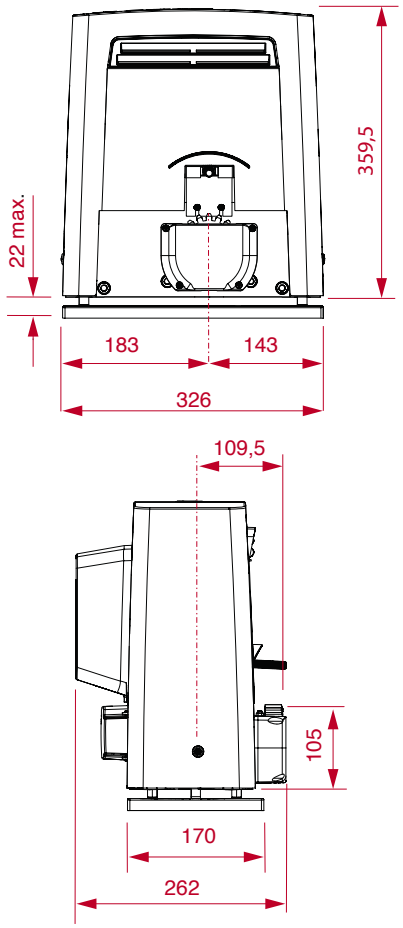

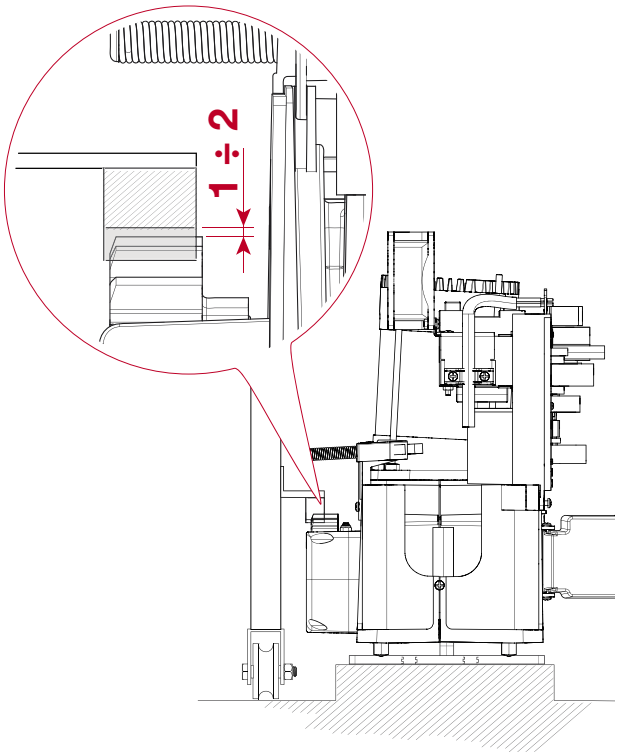

1-2mm. The rack and pinion should mesh.
Do not allow the rack to rest on the pinion.
The gate motor must be installed parallel to the gate.

INSTALLATION

Please refer to the full manual for installing the motor, rack and setting travel end points

5 MANUAL RELEASE

CAME

The BK sliding gate operator has a manual release system found behind a locked compartment on the front of the motor.

TO MANUALLY RELEASE THE GATES:

1. Open the lock cover cap **A1**.
2. Turn the 3-sided triangular key provided **A2** to release the lever.
3. Turn the lever to the vertical position **A3** to release the gate mechanism.
4. With your other hand firmly open the gate. The gate should be manually released. Now fully open the gate carefully at the same speed as the automatic operator.
5. To re-engage, close the gate and return the lever to the horizontal position and push in while turning the key to lock it in pace **B1**.Take the key out and replace the cap **B3**.
6. Attempt to manually move the gate to ensure it is fully engaged.

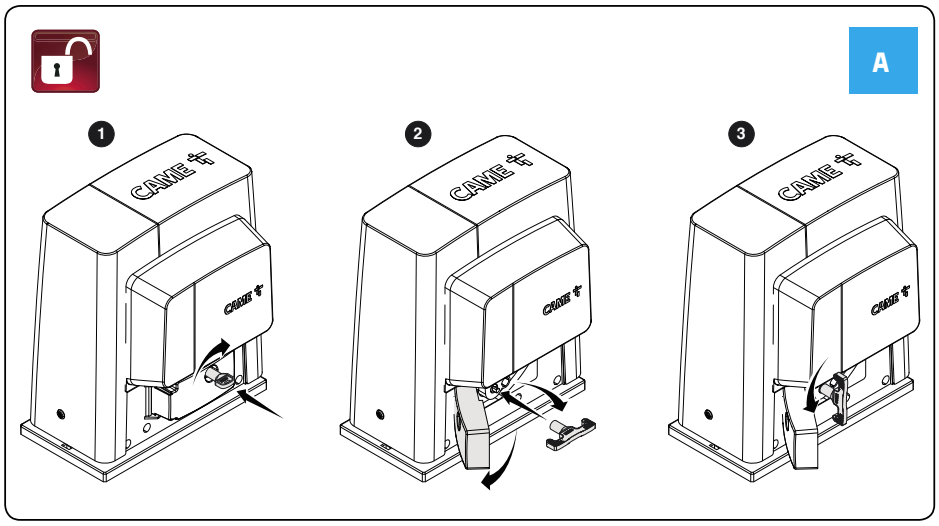

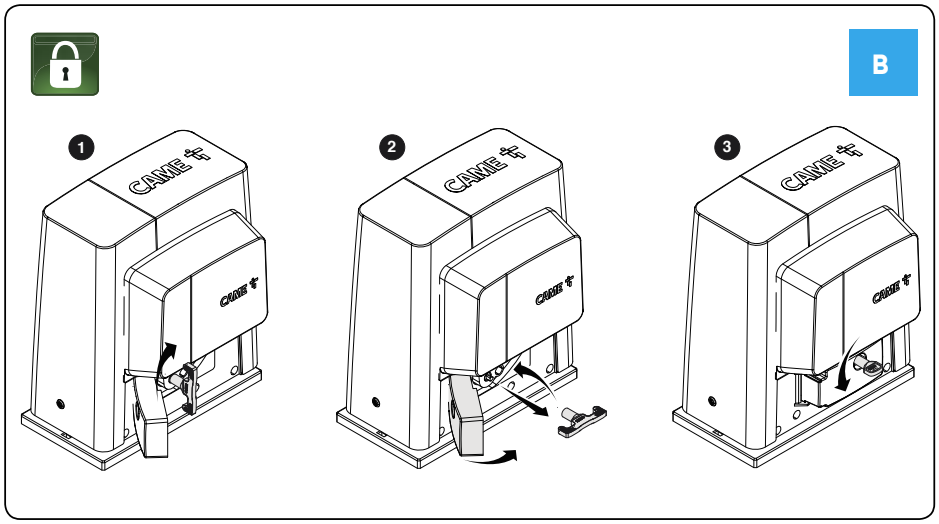

ALWAYS isolate the power supply as instructed by your installer (even in a power cut).

Release any additional locking device fitted to the gate (eg. electric lock etc).

BASIC MAINTENANCE: HINTS & TIPS

- If a ground track is fitted, ensure the track is always clear of debris.
- Lubricate manual release compartment and key mechanism.
- Manually release the gates at least once per month.

6 WIRING DIAGRAM

CAME

ZBKN
Control Panel

DIR
Photocells

CABLE/LENGTH
RX 4 Core 0.5mm Flex
TX 4 Core 0.5mm Flex
1m - 30m

RGSM001S
Gateway Module

CABLE/LENGTH
Max 3m power

MAINS SUPPLY
230 V AC

CABLE/LENGTH
1m - 20m = 3 Core 1.5mm Flex
20m - 30m = 3 Core 2.5mm Flex

TOP-A433N
Antenna

CABLE/LENGTH
RG58
Max. 5m

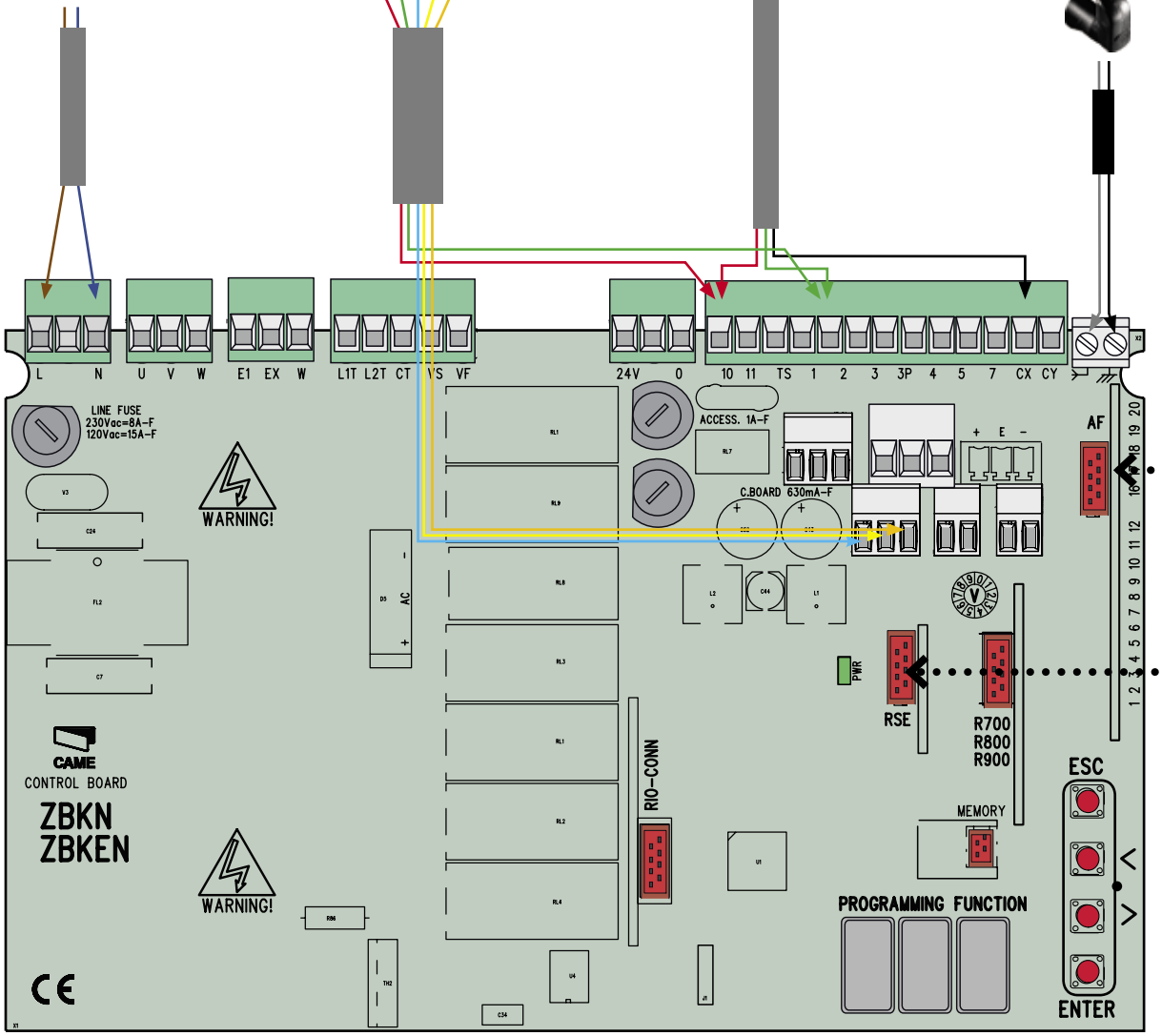

AF43S
Plug-in

RSE
Set RSE jumper to OFF

7 PRE-INSTALLED SIM CARD

CAME

The pre-installed SIM card is an IOT/M2M multi SIM complete with 480MB data allowance and 3 year life term.

Under average usage of 3-4 gate manoeuvres per day, the data should last approximately 3 years.

In case you use up the 480MB data volume before the end of the 3-year term, you can easily add another 480MB data volume by making a top-up, details of which can be found here:
www.cameconnect.co.uk/gsmmodule

System Frequency	Approx. Movements	Est. SIM Life Based on Usage
Occasional Usage	Approx. 5 gate manoeuvres per week	4-7 Years*
Average Usage**	Approx. 3-4 gate manoeuvres per day	3-4 Years
High Usage	Approx. 5+ gate manoeuvres per day, multiple scenarios running	1-3 Years

Due to situations outside of our control, CAME cannot guarantee signal strength or availability and therefore will not be held liable for lack of service.

* SIM will expire after 3-4 years. (CAME guarantees 3 years with some tolerance for shelf life consideration)
** We anticipate SIM provided will have sufficient data for Average Usage (as shown above) lasting approx. 3 years

8 INITIAL POWER ON

CAME

Power on the control board.

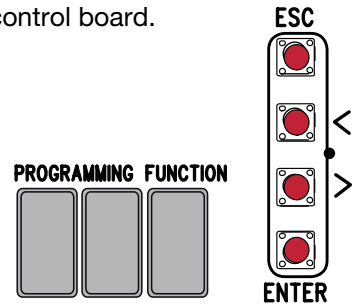

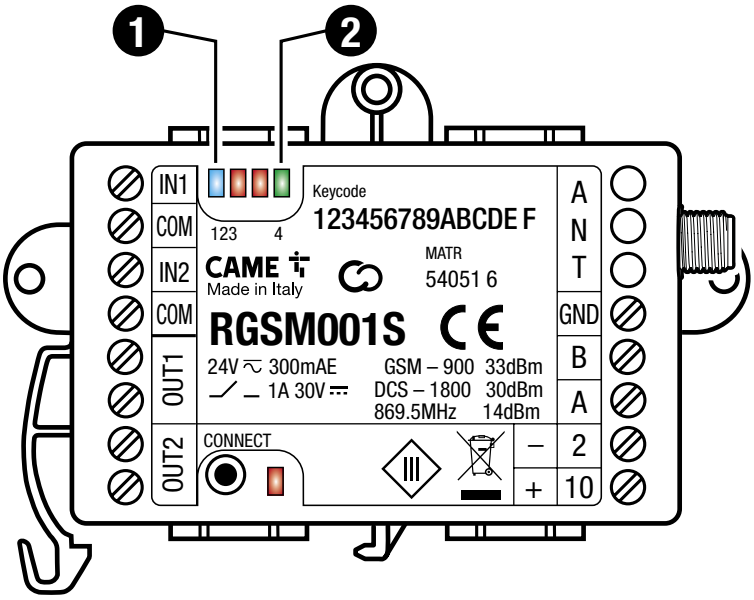

INSTALLER TIP

If the RGSM001S is located in a concealed area and a low GSM signal observed a 2m extension cable and bracket is available to purchase. This then allows the aerial to be located in a more suitable position. Part No: 806SA-0050

❶ **GSM LED (Blue)**
After a few seconds the LED will flash 1x/sec indicating the RGSM001S is registered on a GSM network.

❷ **POWER LED (Green)**
The LED will flash 5x/sec indicating the RGSM001S is not yet configured on the Connect platform

9 COMMISSIONING THE RGSM

CAME

IMPORTANT!

THE INSTALLATION MUST BE CARRIED OUT BY SKILLED AND QUALIFIED PERSONNEL

1 DOWNLOAD THE CONNECT SETUP APP

GET IT ON Google Play

GET IT ON App Store

1.1

2 TECHNICIAN CONNECT SETUP APP

If you have an existing account, please move to step 3.

2.1 Select “Register as technician”.

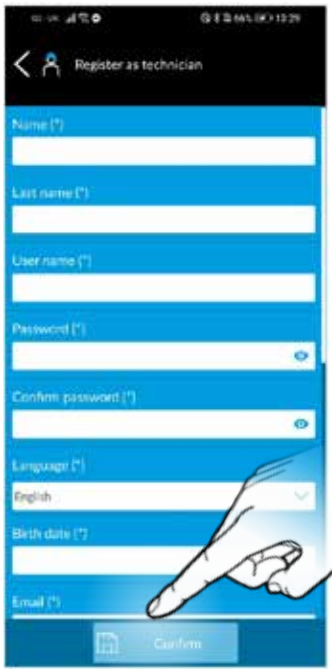

2.2 Fill in your details and then “Confirm”.You will receive an email containing your log in information and request to confirm the account. Should the email not arrive, please check your junk folder.

3 ADDING THE RGSM GATEWAY TO YOUR TECHNICIAN ACCOUNT

3.1 Open the App and log in using your technician details as registered.

3.2 Select “CAME Connect connection”.

3.3 Select “Site management”.

INSTALLER TIP
The Name and Description entered here, can be used to identify the site location.
Name: Mr Wilson, Sills Rd, DE74 2US
Description: Mr Wilson, Sills Rd, DE74 2US
This shows in the Installers Setup App, under the site management list.

3.4 Fill in a site “Name” and “Description” and then press “Add”.

9 COMMISSIONING THE RGSM

CAME

3.5 Select the site you have created.

3.6 Press “Add gateway”.

3.7 Press ‘Manual Add’.

TROUBLESHOOTING

If you have any problems setting up your RGSM, visit our troubleshooting page:

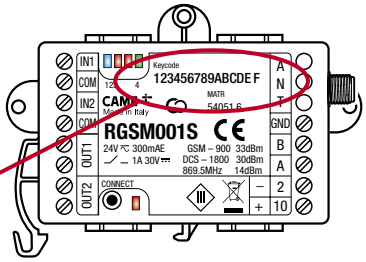

IF YOU INTEND TO RETAIN CONTROL OF THE SIM FOR TOP UP

If, as the installer, you intend to retain control of the SIM for top up purposes, we recommend that you complete the ‘Name’ field with information relating to the customer, property or site and in the **‘Description’ field** you insert the **SIM number** which will give you full visibility of the site information and the description in the installer SETUP app.

HOWEVER, IF YOU ARE TRANSFERRING THE SIM CONTROL TO YOUR END USER

If you intend to transfer control of the SIM for top up purposes to your end user, we recommend that the **Device Name** should be labeled with the **SIM number** to provide your end user long term visibility in the dedicated end user Automation App.

Please Note:
The ‘Description’ field is not visible in the end user Automation App, therefore any information contained within that field will not be available to the end user after handover. The description field is only visible in the Installer SETUP App.

3.8 Manual Add
Enter the “Keycode” located on the front of the RGSM0001S. Enter a “Name” and “Description” followed be “Add”.

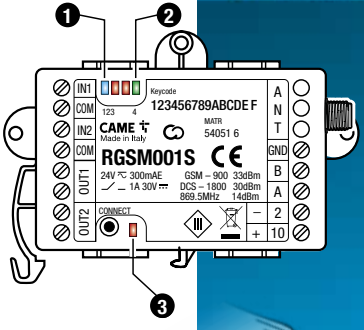

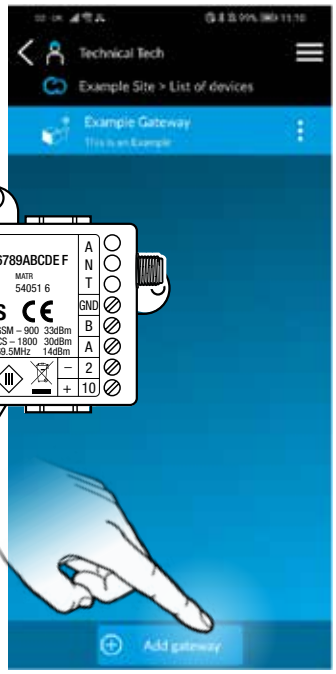

3.9 The RED ❸ and GREEN ❷ LED’s will now be on solid and the BLUE ❶ flashing 1x/sec.

CONGRATULATIONS - the RGSM001S has now been successfully added to the Connect platform

10 COMMISSIONING VIA APP

CAME

1 ADDING AUTOMATION

Select the 3 dots.

Select add automation.

Select Manual Add.

Select BK - ZBKN from the drop-down list.

Enter a name and description, then press Add.

Select the device you have just created.

Select Quick Setup.

Select Yes.

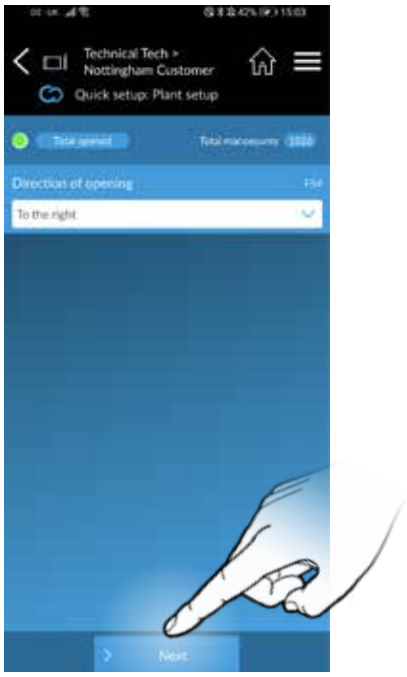

Ensure direction of motor is set.

10 COMMISSIONING VIA APP

CAME

Select OK.

Set the safety inputs (please refer to section 12 for options). Select Next.

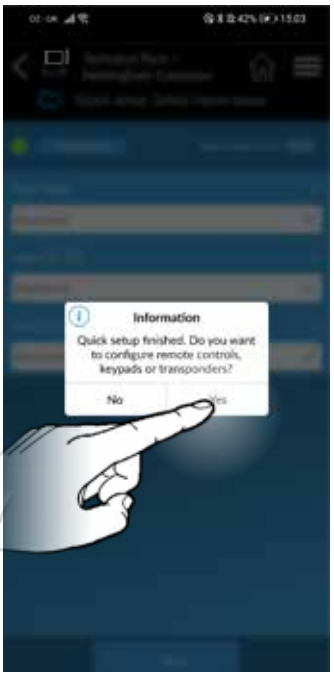

When the gate has successfully calibrated, it will automatically display the dialog box shown below. Select Yes.

Select Add.

Select either Local Acquisition or Add with QR Code.

If you pressed Local Acquisition, the screen will change to the one shown here. Select the button on the fob and it will add the button straight onto the control panel.

10 COMMISSIONING VIA APP

CAME

Once it has been accepted on the control panel It will display the above screen. Enter a Name and select the correct function for the fob. Select Save. Repeat this process for all fobs.

Select the back button to return to the main menu.

If you select ADD via QR Code, the app will open the devices camera enabling scanning of the QR code on the fobs packaging.

Once the QR code has been scanned, enter a Name and select the correct function for each button on the fob. If you wish for a certain button to not be active, then untick the check box for that button. Select Confirm. Repeat this process for all fobs.

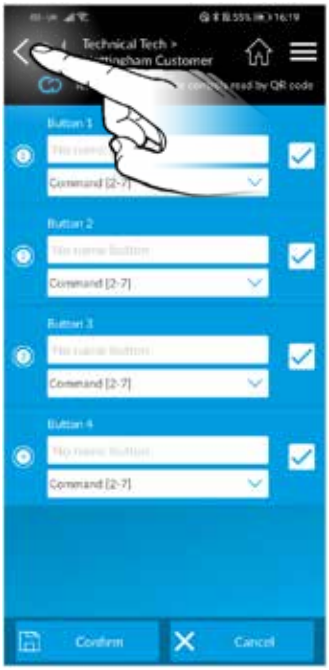

Select the back button to return to the main menu.

2 TRANSFER TO CUSTOMER

To transfer to a customer, select the 3 dots.

Select Transfer site

Enter customer details you wish to transfer to.

Select confirm. The customer will get an email asking to confirm the account.

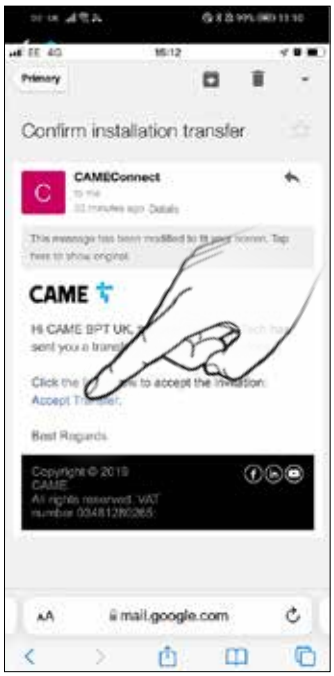

Accept the transfer request directly from the email received by the customer.

If the user has not previously registered, select REGISTER AS USER.

Complete the registration details.

Google Play App Store

Finally, download the Automation App.

On first login you will be prompted to accept the gateway.

You will then be presented with control options for your automation.

11 COMMISSIONING VIA PANEL

CAME

IMPORTANT!

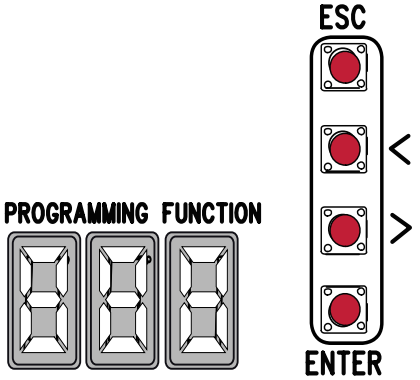

1. **ESC** button - used to perform the following operations:
   - Exit the menu
   - Delete the changes
   - Go back to the previous screen
2. **< >** buttons - used to perform the following operations:
   - Navigate the menu
   - Increase or decrease values
3. **ENTER** button - used to perform the following operations
   - Access menus
   - Confirm a choice

Ensure the wiring is complete (refer to the wiring diagram) & any required physical stops are set before commencing with programming

		Tick
1.	Power on the control panel.	☐
2.	Press and hold the **ENTER** for 2 seconds to access programming (F 1 appears on the display)	☐
3.	Disable total stop – F 1 – O F F	☐
4.	Disable safety inputs – F 2 & F 3 – O F F	☐
5.	Set the opening direction F S 4 – O F F left, O N right (viewed from the inside of the property looking out).	☐
6.	Exit the programming using the **ESC** button.	☐
7.	Check the gate operation by pulsing across connections **2** & **7**, the gate will close.	☐

Please refer to the main manual for:
Changing automatic closing time, adjusting encoder settings if required

SAFETY INPUTS SHOULD NOW BE CONFIGURED AND THE GATE FORCE TESTED AS REQUIRED. PLEASE REFER TO THE FULL MANUAL TO COMPLETE THE COMMISSIONING.

SHOULD THE GATES NOT OPERATE AS SUGGESTED ABOVE, CALL CAME HELPLINE 0115 921 0430 FOR TECHNICAL SUPPORT.

11 COMMISSIONING VIA PANEL

CAME

Ensure the AF card is fitted (refer to the wiring diagram).

ADD A TRANSMITTER BUTTON

1. Press and hold the **ENTER** button for 2 seconds to access programming. (F 1 appears on the display). ☐
2. Add a transmitter button - U 1 ☐
3. Choose the function to be assigned to the button ☐

   1 = Step-by-step

   2 = Sequential

   3 = Open

   4 = Partial opening
4. A flashing number will now appear on the screen. ☐
5. Press and release a button on a transmitter, the number on the screen will increment by one for each button pressed. A maximum of 250 individual buttons can be saved. ☐

REMOVE A TRANSMITTER BUTTON

1. Press and hold the **ENTER** button for 2 seconds to access programming. (F 1 appears on the display). ☐
2. Remove a transmitter button - U 2 ☐
3. Use the arrow buttons to choose the number associated with the transmitter button you wish to remove. ☐

   "C L r" will appear to confirm deletion

REMOVE ALL TRANSMITTERS

1. Press and hold the **ENTER** button for 2 seconds to access programming. (F 1 appears on the display). ☐
2. Remove all transmitters – U 3 – 1 ☐

   All transmitters will be deleted.

TRANSMITTER RADIO DECODING

1. Press and hold the **ENTER** button for 2 seconds to access programming. (F 1 appears on the display). ☐
2. Remove a transmitter button – U 4 ☐
3. Choose the type of radio coding for the transmitters ☐

   1 = All decoding (default)

   2 = Rolling code

   3 = TWIN

SHOULD THE TRANSMITTER NOT OPERATE AS SUGGESTED ABOVE, CALL CAME HELPLINE 0115 921 0430 FOR TECHNICAL SUPPORT.

12 SAFETY OPTIONS

CAME

SAFETY INPUTS

FUNCTIONS > CX Input, CY Input

C1 REOPENING DURING CLOSING

- When the automation is in its closing cycle and the safety circuit is triggered the automation will stop and reverse its motion until it reaches its fully open position again.
- If the auto closing option is enabled and the safety is no longer triggered the auto closing countdown will commence, once completed the automation will start the closing cycle again.
- If the auto closing option is not enabled the automation will return to the fully open position awaiting another activation from a command device.

C2 RECLOSING DURING OPENING

- When the automation is in its opening cycle and the safety circuit is triggered the automation will stop and reverse its motion until it reaches its fully closed position again.
- Once the automation has reached the fully closed position it will require another activation from a command device to restart.

C3 PARTIAL STOP

- When the automation is in its opening cycle and the safety circuit is triggered the automation will stop.
- If the auto closing option is enabled and the safety is no longer triggered the auto closing countdown will commence, once completed the automation will start closing the device.

C4 OBSTRUCTION WAIT

- When the automation is in either its opening or closing cycle and the safety circuit is triggered the automation will stop.
- Once the safety is no longer triggered the automation will carry on the cycle it was performing at the time it was interrupted.

SENSITIVE EDGES

C7 REOPENING DURING CLOSING

- When the automation is in its closing cycle and the safety circuit is triggered the automation will reverse its motion until it reaches its fully open position again.
- If the auto closing option is enabled and the safety is no longer triggered the auto closing countdown will commence, once completed the automation will start the closing cycle again.
- If the auto closing option is not enabled the automation will return to the fully open position awaiting another activation from a command device.

C8 RECLOSING DURING OPENING

- When the automation is in its opening cycle and the safety circuit is triggered the automation will reverse its motion until it reaches its fully closed position again.
- Once the automation has reached the fully closed position it will require another activation from a command device to restart.

R7 REOPENING DURING CLOSURE (SENSITIVE EDGES WITH 8K2 RESISTOR) DIRECT CONNECTION OF AN 8K2 RESISTIVE EDGE

- When the automation is in its closing cycle and the safety circuit is triggered the automation will stop and reverse its motion until it reaches its fully open position again.
- If the auto closing option is enabled and the safety is no longer triggered the auto closing count down will commence, once completed the automation will again start the closing cycle.
- The above sequence will be attempted 3 times before the automation is halted, the automation will then require a activation from a command device to restart
- If the auto closing option is not enabled the automation will return to the fully open position awaiting another activation from a command device

R8 RECLOSING DURING OPENING (SENSITIVE EDGES WITH 8K2 RESISTOR) DIRECT CONNECTION OF AN 8K2 RESISTIVE EDGE

- When the automation is in its opening cycle and the safety circuit is triggered the automation will stop and reverse its motion until it reaches its fully closed position again.
- Once the automation has reached the fully closed position it will require another activation from a command device to restart
- The above sequence will be attempted 3 times before the automation is halted, the automation will then require a activation from a command device to restart

If during the reverse motion a different safety is triggered the automation will perform the appropriate action for the new triggered safety, should multiple safeties be triggered at the same time the automation will be halted at its current position.

13 REPLACING THE SIM CARD

CAME

A third party SIM card may be used, for example, if an existing SIM card is available or the current SIM data contract expires.

To insert a SIM card please do the following:

With the power switched OFF to the control panel, remove the RGSM casing, slide out the existing SIM card and fit the replacement SIM card into the slot. Replace the casing and power up the control panel.

Send an SMS to the telephone number of the SIM, reporting the APN details. Access Point Name – ask the service provider for APN details e.g. APN:pp.vodafone.co.uk Capital, lowercase letters and punctuation must be respected The SIM must be capable of 2G data transmission and have the PIN code disabled.

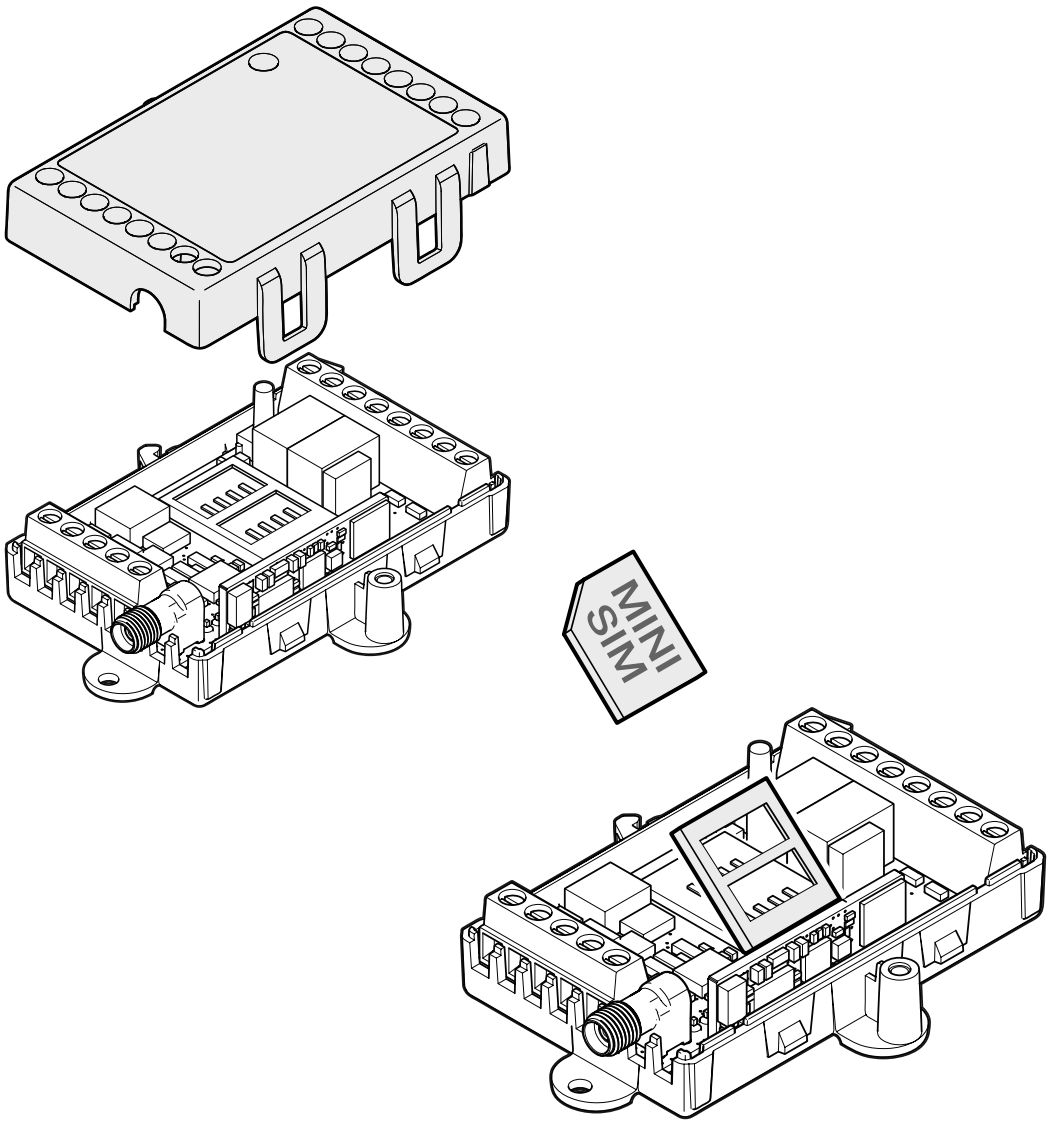

Full instructions for the RGSM001S module
can be found be visiting:
https://docs.came.com/pdf/FA01289M4A.pdf

14 OPTIONAL ACCESSORIES

CAME

	Code(s)	Description
RADIO KEYPAD SELECTORS		
	806SL-0170	SELT1W4G - Surface-mounted, 433.92 MHz radio-frequency keypad selector, 12-keys, with blue backlighting. 25 savable codes and password to access the programming mode. Settable in Rolling Code or Fixed Code mode. RAL7024 Grey colour.
	806SL-0180	SELT1W8G - Surface-mounted, 868.35 MHz radio-frequency keypad selector, 12-keys, with blue backlighting. 25 savable codes and password to access the programming mode. Settable in Rolling Code or Fixed Code mode. RAL7024 Grey colour.
	001**AF868**	Plug-in 868.35 MHz radio frequency control card. **Required for 806SL-0180.**
BLUETOOTH SELECTORS		
	806SL-0210	SELB1SDG1 - Surface-mounted with blue backlighting, for 15 users. RAL7024 Grey colour.
	806SL-0240	SELB1SDG2 - Surface-mounted with blue backlighting, for 50 users. RAL7024 Grey colour.
	806SL-0250	SELB1SDG3 - Surface-mounted with blue backlighting, for 250 users. RAL7024 Grey colour.
TRANSPONDER SELECTORS		
	806SL-0300	SELR1BDG - Surface-mounted Bus transponder reader for cards, keyfobs and TAG (Manchester protocol) with blue backlighting. RAL7024 Grey colour.
	806SL-0310	SELR2BDG - Flush-mounted Bus transponder reader for cards, keyfobs and TAG (Manchester protocol) with blue backlighting. RAL7024 Grey colour.
	001**R700**	Programming board and access control management when used with transponder. **Required for 806SL-0300 and 806SL-0310.**
HARDWIRED KEYPAD SELECTORS		
	806SL-0280	SELT1BDG - Surface-mounted 12 button Bus keypad with blue backlighting. RAL7024 Grey colour.
	806SL-0290	SELT2BDG - Flush-mounted 12 button Bus keypad with blue backlighting. RAL7024 Grey colour.
	001**R800**	Control board for programming and access-control management via keypad selectors. **Required for 806SL-0280 and 806SL-0290.**

FOR MORE KIT ACCESSORIES PLEASE CONTACT SALES ON 0115 9210 430

14 OPTIONAL ACCESSORIES

CAME

	Code(s)	Description
TOP - ROLLING CODE		
	8K06TS-001	TOPD4RXM - 6 packaged dual frequency 4 button rolling code transmitters. 4,294,967,896 combinations.
PHOTOCELLS		
	Surface mounted. Synchronised beam, multiple pairs of photocells can be applied to the same system, even at double height and/or close to each other - with no interference issues (cross talk).	
	001**DIR10**	Pair of 12 - 24 V AC - DC outdoor photocells - range 10m.
	001**DIR20**	Pair of 12 - 24 V AC - DC outdoor photocells - range 20m.
	001**DIR30**	Pair of 12 - 24 V AC - DC outdoor photocells - range 30m.
PHOTOCELL COLUMN		
	001**DIRL**	Natural finish aluminium post. H = 500mm
	001**DIRLN**	Black anodised aluminium post. H = 500mm
	001**DIRCG**	Silver RAL9006, PVC post. H = 500mm
CAME KEY		
	806SA-0110	WiFi internet gateway. Communicate directly with your smartphone or tablet, allowing you to manage the configuration of your device with no need for an internet connection.

FOR MORE KIT ACCESSORIES PLEASE CONTACT SALES ON 0115 9210 430

GENERAL CONDITIONS

CAME

1. SUBJECT

1.1 These general conditions (the "General Conditions") govern the terms of licensing and use of the software (the "Software"), required to use the system called CameConnect ("CameConnect" or the "Service"), which includes (i) the web interface via the website www.cameconnect.net site (the "Website"); (ii) the application for smartphones (the "App"); (iii) firmware and software; (iv) hardware devices (the "Hardware").

1.2 The Service is intended solely for users operating for purposes not related to their entrepreneurial, commercial, artisanal or professional activities (the "Users").

1.3 In order to access the Service, the User, upon activation of the Service itself, must fill in a form present on the Website, in which he/she will have to provide some personal data (the "Form"). The General Conditions, together with the Form, are a contract between the User and Came S.p.A. (the "Contract" and "Came", respectively).

1.4 In order to fill in the Form, the User must also open an account on the Website, if he/she has not done so already, creating an ID and relative password.

Except in the event that a third party violates the Came computer systems, the User shall be exclusively responsible for maintaining the confidentiality of his/her account information, including the password, and any activities originating from the account itself. In the event of unauthorised use of the account, the User shall give immediate written notice to Came so that the account itself can be blocked.

1.5 By accepting the General Conditions, the User declares that he/she is aged over eighteen and is in possession of all the requirements necessary to accept the terms contained herein and recognises the compulsory nature of said terms.

2. SOFTWARE LICENCE

2.1 The Software is the exclusive property of Came.

2.2 By entering into the Contract, Came grants the User a non-exclusive, revocable, limited, personal and non-transferable licence for the Software for an indefinite period, which may only be used in accordance with the terms of the Contract.

2.3 The User shall be exclusively responsible for the use of the Software and, to that end, undertakes not to use it with any application other than CameConnect and/or in relation to products other than those from the Came Group.

2.4 The User remains responsible for ensuring he/she has the tools and technical accessories necessary to support the use of the Software.

2.5 Came remains the exclusive owner of all rights concerning the Software and CameConnect, including trademarks, patents and confidential information related thereto. Consequently, under the Contract, the User does not acquire any right, title or interest in respect of any intellectual property rights, copyright or other proprietary rights, including patents, designs, trademarks, copyright, database rights, commercial or confidential information or secrets proprietary to or available to Came.

2.6 The User recognises that the Software, and related documentation, are licensed exclusively to the User and that the use of the Software must be in accordance with applicable laws, in particular those concerning the protection of copyright and/or other industrial or intellectual property rights.

Consequently, the User is prohibited from:

copying (except for backup), transferring, reselling, sublicensing and/or marketing the Software in any form, in whole or in part;

modifying, decompiling, disassembling and/or performing reverse engineering on the Software;

using the Software for purposes other than the operation of CameConnect;

removing any reference to Came's proprietary rights relating to the Software and CameConnect.

3. THE SERVICE

3.1 The Service has the characteristics described in detail in the User Manuals.

3.2 Each subscription to the Service is governed by the General Conditions, in the version published on the Website at the time the Form is submitted.

3.3 The prices and characteristics of the Service are subject to change without notice. Before filling in the Form, the User must verify the aforementioned information and, in particular, the indicated amount.

3.4 The User acknowledges that:

it is necessary to download and install the Software in order to use the Service;

correct use of the Software requires the possession of an automation, home automation, security, temperature control and/or video surveillance system manufactured by Came, which has been enabled for remote management.

3.5 Any costs for connection via internet, including telephone costs, according to the rates applied by the operator chosen by the User himself/herself, are the sole responsibility of the User. The User also hereby declares that he/she is aware of the fact that the Hardware must be equipped with a SIM card that permits internet access, with costs borne solely by the User himself/herself. The estimated data consumption for average use is less than around 1 GB/month for each automation, it being understood that actual traffic depends on actual usage.

3.6 The Service can only by purchased by users residing in once of the countries listed on the Website.

4. CONCLUSION OF THE CONTRACT

4.1 In order to purchase the Service and sign up for the related subscriptions, the User must first register on the Website and submit the Form.

4.2 The publication of the Service on the Website represents the invitation to the User to submit a contractual offer, which will be submitted by filling in the Form. Came reserves the right to accept or reject said offer.

4.3 The Contract will be considered concluded at the moment in which the Service is activated or in which the activation confirmation e-mail is sent to the User at the e-mail address indicated on the form, whichever comes first.

4.4 In the event that Came encounters any inaccuracy in the fee and/or characteristics of the Service published on the Website, it will give explicit written notice to the User, who will be free to formulate a new offer.

5. FEE AND PAYMENT

5.1 Where applicable, the fee for the Service indicated on the Website (the "Fee") is expressed in Euros.

5.2 Unless otherwise specified, the Fee is inclusive of VAT and any indirect taxes, if applicable.

5.3 The User shall pay the sum indicated on the Form to Came, according to the deadlines set out therein.

5.4 Upon completion of the Form, where a Fee is required, the User will automatically be directed to the website of the subject responsible for the management of online payments. Came reserves the right to verify the identity of the holder of the credit card by requiring proper documentation.

5.5 The provision of the Service will only start when the payment of the Fee has been correctly received by Came. If Came does not receive payment within 10 working days from the due date, Came may immediately suspend the Service and terminate the Contract by giving written notice to the User.

6. RIGHT OF WITHDRAWAL

6.1 The User is entitled to withdraw from the Contract concluded under the General Conditions, without penalty, within 14 days of its conclusion.

6.2 To exercise the right of withdrawal, the User must inform Came, before the expiry of the period referred to in art. 6.1 above, by completing this sample withdrawal form, or by sending an explicit declaration of his/her decision to withdraw.

Came will promptly send the User an e-mail confirming receipt of the request for withdrawal.

6.3 In the event of a legitimate and proper exercise of the right of withdrawal, the User will be reimbursed any sums already paid to Came, within 14 days of receiving the notice of withdrawal, using - unless otherwise indicated by the User - the same means of payment used by the latter.

If, at the time of the declaration, the provision of the Service has already begun at the express request of the User, Came will be entitled to retain reasonable fees for the use of the Service, in proportion to the period of use thereof.

7. DURATION OF THE SERVICE

7.1 The subscription to the Service is indefinite. The User may withdraw from the Contract at any time without penalty or reimbursement, on the condition that the withdrawal will be effective from the last day of the month in which the notice of withdrawal is received by Came. The User may exercise the right of withdrawal by completing this sample withdrawal form, or by sending an explicit declaration of his/her decision to withdraw.

7.2 Came may in turn withdraw from the Contract at any time without reimbursement or compensation being due, on the condition that the withdrawal will be effective from the last day of the month in which the User receives notice of withdrawal from Came.

GENERAL CONDITIONS

CAME

8. TERMINATION OF THE CONTRACT

Came reserves the right to suspend the Service and/or terminate the Contract with immediate effect in the case of non-payment of the amount referred to in article 5 or in the case of the violation of the terms of articles 2.3 and/or 2.6. In this case, termination shall occur automatically upon receipt by the User of the notification sent by Came, with no obligation for prior notice, without prejudice to the right of Came to claim compensation for any damage suffered.

9. PROVISION OF THE SERVICE. LIMITATION OF LIABILITY

9.1 Came undertakes to ensure the ongoing provision of the Service.

9.2 Came will do everything in its power to schedule maintenance of the systems so as to ensure the ongoing nature of the provision. In the event of extraordinary and/or unscheduled maintenance, Came shall take all reasonable measures to reduce the inconvenience to the User.

9.3 In the event that any Service deficiencies are due to causes not attributable to Came, including, but not limited to, unforeseeable circumstances, force majeure, technical problems related to third-party internet, software or hardware, interference and/or specific weather conditions, Came will not be in any way liable for the failed or faulty provision of the Service, nor will it be liable for any loss, damage or injury arising from these to the User.

10. USER DATA AND PRIVACY PROTECTION

10.1 The subscription to the Service through the Website and the use of the App assume that the User grants the data necessary for the provision of the Service itself. To this end, the User undertakes to communicate correct, current and truthful data required in order to enter into the Contract.

10.2 The User's personal data will be processed by Came as detailed in its privacy policy.

10.3 The User acknowledges that, with the prior express consent of the User himself/herself, Came may inform its network of installers of the data strictly necessary for the provision of remote assistance services. In particular, with the express consent of the User, the installer that performed the installation of the automation, home automation, security, temperature control and/or video surveillance system manufactured by Came may be associated with the system itself. In this way, the installer can perform remote diagnostics, also verifying the number of operations performed, the status of the photocells and the Hardware parameters, and proceed with remote assistance to help the User.

11. COMMUNICATION

Any communication from the User that is connected and/or related to the Contract - including any complaints, reports, requests concerning the purchase and/or provision of the Service, exercising the right of withdrawal etc. - must be sent to the e-mail address support.cameconnect@came.com or, by registered mail with acknowledgement of receipt, to the following address:

Came S.p.A.
Via Martiri della Libertà 15
31030 Dosson di Casier
Treviso - Italy.

Any communication to the User will be sent by registered mail with acknowledgment of receipt or by e-mail to the addresses indicated on the Form.

12. APPLICABLE LAW

12.1 The Contract is governed by Italian law and, in particular, by the Italian Legislative Decree dated 9 April 2003, no. 70 on certain aspects of electronic commerce and, for residents of Italy, by the Italian Legislative Decree dated 6 September 2005, no. 206, "Consumer Code", with specific reference to provisions relating to distance contracts.

12.2 In any case, any rights that may be attributed to the User by mandatory legal provisions, in force in the country of residence or domicile of the latter shall remain unaffected.

13. DISPUTES

For any dispute arising under the Contract or related to it, jurisdiction will be exclusively as follows:

a) the Court of the place of residence or domicile of the User, if located in Italy;

b) the Court of Treviso (Italy), if the residence and domicile of the User are located outside Italy.

14. MISCELLANEOUS

The Contract constitutes the entire agreement between the Parties with regard to the subject defined herein and supersedes any previous contracts, agreements and negotiations with the same subject.

Came reserves the right to make changes to the General Conditions at any time, publicising them to Users on this page. In the event of a failure to accept the changes made to the General Conditions, the User may withdraw from the Contract under the terms of article 7.1.

TERMS OF USE

CAME

1. SUBJECT

1.1 These terms of use (the “Terms of Use”) govern the terms and conditions under which Came S.p.A. (“Came”) licenses the installation technicians in its network (the “Installers”) to use the software necessary to access and supply end customers with certain services related to the system called CameConnect (the “Software” and “CameConnect” respectively), which includes (i) the web interface via the website www.cameconnect.net (the “Website”); (ii) the smartphone application (the “App”); (iii) firmware and software; (iv) hardware devices (the “Hardware”).

1.2 The owner of the Software, the Website and CameConnect is Came.

1.3 In order to download the Software and access CameConnect, the Installer must fill in a form on the Website, in which he/she will have to provide some personal data (the “Form”).

In order to fill in the Form, the Installer must also register on the Website, if he/ she has not done so already, opening an account, creating an ID and relative password. Except in the event that a third party violates the Came computer systems, the Installer shall be exclusively responsible for maintaining the confidentiality of his/her account information, including the password, and any activities originating from the account itself. In the event of unauthorised use of the account, the Installer shall give immediate written notice to Came so that the account itself can be blocked.

1.4 By accepting the Terms of Use, the Installer declares that he/she is in possession of all the requirements necessary to accept the terms contained herein and recognises the compulsory nature of said terms.

2. LICENSING AND INTELLECTUAL PROPERTY RIGHTS

2.1 Came grants the Installer a non-exclusive, revocable, limited, personal and non-transferable licence for the Software for an indefinite period, which may only be used in accordance with the Terms of Use.

2.2 The Installer shall be exclusively responsible for the use of the Software and, to that end, undertakes not to use it with any application other than CameConnect and/or in relation to products other than those from the Came Group.

2.3 The Installer remains responsible for ensuring he/she has the tools and technical accessories necessary to support the use of the Software. The minimum system requirements required at that particular time are indicated on the following webpage.

2.4 Came remains the exclusive owner of all rights concerning the Software and CameConnect, including trademarks, patents and confidential information related thereto. Consequently, the Installer does not acquire any right, title or interest in respect of any intellectual property rights, copyright or other proprietary rights, including patents, designs, trademarks, copyright, database rights, commercial or confidential information or secrets proprietary to or available to Came.

2.5 The Installer recognises that the Software, and related documentation, are licensed exclusively to the Installer and that the use of the Software must be in accordance with applicable laws, in particular those concerning the protection of copyright and/or other industrial or intellectual property rights.

Consequently, the Installer is prohibited from:

copying (except for backup), transferring, reselling, sublicensing and/or marketing the Software in any form, in whole or in part;

modifying, decompiling, disassembling and/or performing reverse engineering on the Software;

using the Software for purposes other than the operation of CameConnect;

removing any reference to Came’s proprietary rights relating to the Software and CameConnect.

3. CAMECONNECT

3.1 CameConnect has the features described in detail in the User Manual.

3.2 The features of the Software and CameConnect are subject to change without notice.

4. DURATION OF THE LICENCE

The licence shall be deemed granted indefinitely. Either party may withdraw at any time without penalty or compensation.

5. EXPRESS TERMINATION CLAUSE

Came reserves the right to terminate this licence agreement with immediate effect in the event of the violation of the terms of Articles 2.2 and/or 2.5. In this case, termination shall occur automatically upon receipt by the Installer of the notification sent by Came, with no obligation for prior notice, without prejudice to the right of Came to claim compensation for any damage suffered.

6. PROVISION OF THE SERVICE. LIMITATION OF LIABILITY

6.1 Came undertakes to ensure the ongoing provision of CameConnect and the contents of the Website.

6.2 Came will do everything in its power to schedule maintenance of the systems so as to ensure the ongoing nature of the provision. In the event of extraordinary and/or unscheduled maintenance, Came shall take all reasonable measures to reduce the inconvenience to the Installer.

6.3 In the event that any service deficiencies are due to causes not attributable to Came, including, but not limited to, unforeseeable circumstances, force majeure, technical problems related to third-party internet, software or hardware, interference and/or specific weather conditions, Came will not be in any way liable for the failed or faulty provision of the service, nor will it be liable for any loss, damage or injury arising from these to the Installer.

7. INSTALLER DATA AND PRIVACY

7.1 Registering on the Website implies the transfer by the Installer of certain personal data. To this end, the Installer undertakes to communicate correct, current and truthful data.

7.2 The Installer’s personal data will be processed by Came as detailed in its privacy policy.

7.3 With the prior express consent of end customers, Came may inform the Installer of the data strictly necessary for the provision of remote assistance services related to CameConnect. In particular, with the express consent of the end user, the Installer that performed the installation of the automation, home automation, security, temperature control and/or video surveillance system manufactured by Came may be associated with the system itself. In this way, the Installer can perform remote diagnostics, also verifying the number of operations performed, the status of the photocells and the Hardware parameters, and proceed with remote assistance to help the end customer.

For the above purposes, pursuant to Italian Legislative Decree 196/2003, by filling in the form and/or registering on the Website, the Installer is appointed as external data processor. The Installer therefore undertakes to comply with the applicable laws regarding privacy, doing whatever is necessary to ensure the confidentiality and protection of data disclosed by Came, and putting in place all necessary technical measures. The Installer shall hold harmless and indemnify Came from any liability that may arise to the latter in violation of this article.

The Installer may use the data disclosed by Came exclusively for the provision of the remote assistance services related to CameConnect; any other use of the same is forbidden, as is its provision, sale and/or transfer to third parties.

In any case of termination of the licence, the Installer undertakes to delete the data immediately, and in any case within 5 days from the termination itself, providing immediate written confirmation to Came.

8. GENERAL PROVISIONS

8.1 Any communication from the Installer that is connected and/or related to the relationship with Came - including any complaints, reports, requests, exercising of the right of withdrawal etc. - must be sent to the e-mail address support.cameconnect@came.com or, by registered mail with acknowledgement of receipt, to the following address:

Came S.p.A.
Via Martiri della Libertà 15,
31030 Dosson di Casier
Treviso - Italia

Any communication to the Installer will be sent by registered mail with acknowledgment of receipt or by e-mail to the addresses indicated on the form.

8.2 Any dispute arising from these Terms of Use or related thereto will be under the exclusive jurisdiction of the Court of Treviso (Italy).

8.3 Came reserves the right to make changes to the Terms of Use at any time, publicising them on this page. In the event of a failure to accept the changes made to the Terms of Use, the Installer may withdraw under the terms of article 4.

1NCE TERMS AND CONDITIONS

CAME

General Terms and Conditions of 1NCE GmbH for M2M/IoT mobile communications services (version as of 07/2018)

1. Scope of application

1.1 The following General Terms and Conditions (hereinafter referred to as "GTC") shall govern any and all contracts relating to the provision of mobile communications services for machine-to-machine (M2M) and Internet of Things (IoT) applications and related services (hereinafter altogether referred to as the "Services") concluded between 1NCE GmbH, Sternengasse 14-16, 50676 Cologne, Germany, Local Court of Cologne, HRB 92529 (hereinafter referred to as "1NCE") and the Customer.

1.2 The provision of the Services by 1NCE shall be carried out exclusively under the application of these GTC. The application of any terms and conditions of the Customer which contradict or deviate from these GTC is excluded.

1.3 The offer of the Services through 1NCE is addressed exclusively to businesses within the meaning of Section 14 of the German Civil Code (Bürgerliches Gesetzbuch, hereinafter referred to as "BGB").

2. Conclusion of contract

2.1 The offers made by 1NCE regarding the provision of the Services are non-binding. Such offers do not constitute a binding offer to conclude a contract, but merely a request for the submission of an order by the Customer in accordance with 1NCE's offer.

2.2 As a general rule, the Customer places its order via the 1NCE web shop. However, 1NCE reserves the right, in individual cases, to also allow the Customer, upon a request of the Customer declared in text form, to submit a completed and signed order form to 1NCE; however, the Customer is not entitled to claim such form of ordering. With its order, the Customer submits a binding offer to conclude a contract.

2.3 The Customer undertakes to only provide true and correct information in the context of its order. In particular, the Customer shall ensure that the Customer's billing address indicated by the Customer corresponds to the address for which the Customer has been assigned the stated VAT identification number. Furthermore, the Customer undertakes to provide to 1NCE in connection with the order all documents required in accordance with Section 111 para. 1 sentence 3 of the German Telecommunications Act (hereinafter referred to as "TKG") or – if offered by 1NCE – to participate in any other identity verification procedure suitable in accordance with Section 111 para. 1 sentence 4 TKG; this obligation applies accordingly in the event that a change occurs with regard to the data provided by the Customer before or after the conclusion of the contract (Section 111 para. 3 TKG).

2.4 A contract is only concluded when 1NCE accepts the Customer's order by issuing an order confirmation or at the latest when 1NCE commences with the performance of the Services (i.e. activation of the Chip Card).

2.5 Text form is sufficient for all declarations of the Parties referred to in this Section 2.

3. 1NCE's performance obligations / Right to modify

3.1 The Services include the following service elements:

a) the provision of access to mobile communication for M2M/IoT applications with which the Customer can use low-bandwidth mobile data connections and additional network services as well as other related services – this is done through derivative allocation of a mobile number and an additional identification number (e.g. International Mobile Subscriber Identity [IMSI], Mobile Subscriber Integrated Services Digital Network Number [MSISDN], Integrated Circuit Card Identifier [ICCID]) as well as the provision of a chip card encoded with the allocated number, currently in the form of a SIM card (in these GTC in each case referred to as the "Chip Card") to the Customer;

b) the provision of low-bandwidth mobile data communications services in the Federal Republic of Germany and – where available on the basis of existing roaming agreements between the relevant mobile network operators – in certain other EU Member States or third countries specified in the Service Description; and

c) the provision of additional network services and other related services, in particular including the possibility of receiving and sending SMS (Short Message Service) messages and the provision of a software-based connectivity management platform; 1NCE shall provide the Customer with access to this platform either via a customer web portal or – provided that the Customer ensures full compatibility of its Customer systems within its sphere of responsibility – such access may be integrated by the Customer itself at its own expense into these Customer systems by using 1NCE's application programming interfaces (APIs).

The exact scope of the Services in accordance with this Section 3.1 shall be determined in each case by the service description attached to these GTC as an Annex (in these GTC in each case referred to as the "Service Description").

3.2 1NCE performs the Services within the boundaries of its technical and operational capabilities. The mobile communications services referred to in Section 3.1 lit. a) and b) of these GTC are provided by 1NCE on thework operators. 1NCE also uses subcontractors as technical service providers for the provision of individual parts of the additional network services and other related services referred to in Section 3.1 lit. c) of these GTC. 1NCE expressly points out that the type and scope of such services of the respective mobile network operators, in particular also the respective available transmission technologies (e.g. no permanent use of 2G/3G in individual countries), may vary and, in addition, individual available transmission technologies may not enable the use of certain network services or other related services. The details of the actually available scope of Services is set out in the Service Description.

3.3 1NCE's obligation to perform is limited

a) to the activation period of the Chip Card in accordance with Section 3.5 of these GTC (hereinafter referred to as the "Activation Period");

b) to a consumable data volume of 500 MB per Chip Card; and

c) a volume of 250 SMS per Chip Card, in which case a pro rata consumption of this volume takes place both by each SMS received (Mobile terminated MT) and each SMS sent (Mobile Originated - MO) and 1NCE further expressly points out that the technical solution used by 1NCE only supports SMS transmissions between terminal device and server (both traffic directions), but not SMS transmissions between two terminal devices (the data volume referred to in lit. b) and the SMS volume referred to in lit. c), unless otherwise indicated, are hereinafter referred to individually and together as the "Quota" or the "Quotas".

The Customer is entitled at any time to purchase additional Quotas for the relevant Chip Card once or several times (see Sections 5.1 and 5.3 of these GTC); this can already take place before the complete use of an original Quota. The Activation Period of the relevant Chip Card as such remains unaffected by the subsequent purchase of additional Quotas.

3.4 If one of the original Quotas (data volume or SMS volume) or another Quota subsequently purchased by the Customer is used up before the end of the Activation Period, the Chip Card will be temporarily deactivated and can no longer be used until further notice. Upon receipt of payment of the charge for a Quota subsequently purchased by the Customer, any temporarily deactivated Chip Card will be immediately reactivated by 1NCE. Additional Quotas can only be purchased in such a way that both a full data volume and a full SMS volume are purchased at the same time in accordance with Sections 3.3 sentence 1 lit. b) and c) of these GTC.

3.5 The Activation Period for the respective Chip Card is ten years from the beginning of the fourth calendar month following the calendar month in which 1NCE dispatches the Chip Card to the Customer, unless the Activation Period ends earlier in accordance with Section 3.6 of these GTC or is extended by mutual agreement between the Parties in text form based on the then current terms. The initial activation of the Chip Card takes place before the Chip Card is sent to the Customer; the Chip Card can therefore be used from the moment of receipt through the Customer.

3.6 The Activation Period automatically ends early if

a) within 18 months after 1NCE has notified the Customer in text form that the data volume or the SMS volume of the relevant Chip Card has been used up before the end of the Activation Period, the Customer has not subsequently purchased an additional Quota;

b) no data has been sent or no SMS has been received or sent by the relevant Chip Card for a continuous period of at least 18 months; or

c) the Customer has finally deactivated the relevant Chip Card within the connectivity management platform provided by 1NCE.

3.7 The Chip Card is provided to the Customer as a sale; the Chip Card therefore becomes the Customer's property when it is handed over to the Customer. The right of 1NCE (a) to deactivate or block the Chip Card or (b) to make designated configuration changes to the Chip Card or to download and install software updates on the Chip Card by OTA (Over the Air) remote control for the purpose of continued service provision, as part of the Services and in accordance with the provisions of these GTC, shall remain unaffected and shall continue for the entire term of the contract. From the time of transfer of risk, the Customer bears the risk of accidental loss or accidental deterioration of the Chip Card. In particular, 1NCE is therefore not obliged to replace a Chip Card that has been lost or damaged or rendered unusable due to circumstances not attributable to 1NCE. All Quotas are also linked to the use of the specific Chip Card provided. Therefore, in the case of sentence 4, 1NCE is not obliged to transfer any remaining Quota that cannot be used anymore to another Chip Card or to make any other reimbursement to that effect.

3.8 The transfer of risk with regard to the Chip Card shall take place in accordance with Section 447 para. 1 BGB. Unless otherwise agreed between the Parties in text form, CIP Incoterms® 2010 shall apply when sending Chip Cards to delivery addresses of the Customer outside the Federal Republic of Germany.

3.9 To the extent 1NCE is liable for defects with regard to individual elements of the Services under statutory warranty provisions (Mängelhaftung), this liability shall be governed by the applicable provisions of statutory law. In particular, the prescription period relating to claims for defects in respect of Chip Cards shall begin from the time

of receipt of the relevant Chip Cards by the Customer. Liability for damages due to defects is limited in accordance with the provisions of Section 8 of these GTC.

3.10 The provision of the Services by 1NCE is otherwise subject to the provisions of these GTC and applicable laws and regulations, in particular those of the TKG.

3.11 For operational reasons and/or reasons of technological development, 1NCE shall be entitled to change the specifications and functionalities of the Services and to adapt the Service Description accordingly, provided that the respective change does not reduce or impair the essential performance characteristics of the Services. This may also result in changed system requirements to be observed by the Customer (see Section 4.5 of these GTC). Sentences 1 and 2 shall apply mutatis mutandis if third parties from whom 1NCE obtains underlying services necessary for the provision of the Services change their services.

4. Terms of use / Cooperation obligations of the Customer

4.1 The Customer may only use the Services in accordance with these GTC and the Service Description for its own purposes.

4.2 The Customer is not permitted to make the Services available to third parties for their sole use or commercial use or to otherwise pass them on to third parties without the prior permission of 1NCE. In particular, the Customer is also not entitled to act as a provider of telecommunications services using the Chip Cards made available to it for use and to offer mobile communications services, switching or interconnection services to third parties.

4.3 The Services may not be used abusively or in any other illegal manner in violation of legal prohibitions in the Federal Republic of Germany or at the respective place of use. In particular, no legally prohibited, unsolicited information, goods and other services shall be sent by the Customer. Furthermore, (a) no information with unlawful or immoral content may be transmitted and no reference may be made to such information; (b) connections may not be established which serve the purpose that the Customer or a third party is to receive payments or other consideration on account of the connection or the duration of the connection (e.g. in return for SMS to chat lines or advertising hotlines), or which do not serve the purpose of direct communication with another subscriber, but only for the purpose of establishing the connection and/or the duration of the connection; (c) national and international copyrights, trademarks, patents, names and other intellectual property rights and personal rights of third parties must be observed.

4.4 1NCE shall be entitled, in the event of serious breaches by the Customer of the obligations incumbent upon it in accordance with Section 4.3 of these GTC, to block the Services at the Customer's expense, without the Customer being exempted from the obligation to pay the agreed charges in this respect. The regulation of Section 45o TKG regarding the blocking of call numbers remains unaffected.

4.5 The Customer undertakes to comply with the system requirements for the use of the Services specified in the Service Description and to comply with the cooperation obligations specified in these GTC and the Service Description. To the extent non-observance of the system requirements in accordance with sentence 1 by the Customer can have a detrimental effect on network operation, in particular on network security or network integrity (e.g. in the case of operation of non-network-compliant terminal devices by the Customer), 1NCE shall in particular be entitled to block the relevant Chip Card; any further rights and claims of 1NCE shall remain unaffected.

4.6 The Customer is further obliged to

a) notify 1NCE's customer service without undue delay of the loss of the Chip Card provided to the Customer;

b) notify 1NCE without undue delay in text form of any change in its name or company name, legal form, address or invoice recipient, or to have a third party authorized to do so notify 1NCE accordingly (see also Section 2.3 sentence 3 [second half] of these GTC);

c) to keep personal access data (such as passwords) confidential and to change them without undue delay if it is suspected that unauthorized persons may have gained knowledge of them;

d) to make backup copies of all Customer data used in connection with the Services at reasonable intervals in order to enable lost or destroyed Customer data to be restored with reasonable effort; and

e) in the event of a request for information addressed to 1NCE by authorities or courts in connection with the Services, to provide 1NCE without delay with the information requested by 1NCE in relation to the Customer and, in particular, to transmit to 1NCE documents and information necsary to enable 1NCE to comply with the relevant request for information.

5. Charges / Objections of the Customer

5.1 The Customer shall pay the charges agreed between the Parties in accordance with Section 2 of these GTC for the Services. Within the framework of the conclusion of the contract, the Customer may choose between different payment methods offered by 1NCE. Unless otherwise agreed between the Parties, the charges to be paid by the Customer for the purchase of additional Quotas in accordance with Section 3.3 sentence 2 of these GTC shall be determined by the price list of 1NCE valid at the time of this purchase.

5.2 All charges are to be paid by the Customer in advance (prepaid). Payments by the Customer must be made within 14 days of receipt of the invoice at the latest.

5.3 The Chip Card shall not be activated for the first time and dispatched until 1NCE has been able to record the complete receipt of payment both for the charge attributable to the Chip Card (this includes the purchase price for the Chip Card and the fees for the respective original Quota) and any additional charge owed by the Customer (e.g. for the dispatch of the Chip Card). Also, the reactivation of a temporarily deactivated Chip Card (see Section 3.3 sentence 2 of these GTC) will only take place as soon as 1NCE has been able to record the complete receipt of payment with regard to an additional Quota purchased by the Customer at a later date.

5.4 If the Customer orders several Chip Cards within the scope of one order, the activation and dispatch of all ordered Chip Cards in accordance with Section 5.3 of these GTC will only take place as a whole when 1NCE has been able to record the complete receipt of payment for all charges relating to the ordered Chip Cards. 1NCE is not obliged to provide partial deliveries; therefore, no activation or dispatch of partial quantities of ordered Chip Cards will take place.

5.5 All charges shall be in Euro plus any applicable statutory value added tax (which shall also be borne by the Customer). Any taxes, levies, duties and similar charges incurred outside the Federal Republic of Germany in connection with the Services shall be borne by the Customer. This also applies in particular to the value added tax to be borne by the service recipient in accordance with the provisions of the EU VAT system directive in its EU member state (reverse charge procedure).

5.6 The Customer may only set off payment claims asserted by 1NCE against counterclaims which are undisputed or have become res judicata. The same applies to any rights of retention asserted by the Customer.

5.7 Complaints raised by the Customer against the amount of the connection charges or other usagedependent charges vis-à-vis 1NCE are subject to the legal provisions of Sections 45i, 45j TKG. Therefore, in particular the following applies: Complaints of the Customer must be made within eight weeks of the connection being established. Failure to make such complaints in good time shall be deemed approval. The Customer's statutory claims in the event of complaints after the lapse of the said time period shall remain unaffected.

6. Contract Term / Termination

6.1 The contractual relationship is concluded for an indefinite period of time.

6.2 The contractual relationship in respect of each individual Chip Card may be terminated by

a) the Customer at any time without period of notice; and

b) 1NCE with a period of two weeks, but not before the end of the ActivationPeriod.

6.3 The right of both Parties to terminate the contractual relationship exceptionally for good cause (außerordentliche Kündigung aus wichtigem Grund) remains unaffected.

6.4 No compensation for any unused Quota that may still exist at the time of termination of the contract with regard to the relevant Chip Card shall be payable to the Customer unless 1NCE is responsible for an exceptional termination through the Customer for good cause (see Section 6.3 of these GTC).

6.5 Any termination must be made in text form in order to be valid.

7. Rights of use / IP rights of third parties

7.1 To the extent 1NCE provides the Customer with software for use within the scope of the Services, 1NCE grants to the Customer a simple right to use the software for the duration of the respective contract term, which is limited to the countries specified in the Service Description. This right of use is (a) neither sublicensable nor transferable and (b) subject to the restrictions resulting from these GTC and the Service Description. Further rights to use the software are not granted to the Customer. Similarly, the Customer shall not be granted any rights to edit the software unless such rights are required by mandatory law.

7.2 If, in respect of the rights of use referred to in Section 7.1 above, a violation of third party intellectual property rights is asserted or threatened to be asserted, 1NCE shall be entitled, at its own discretion and expense, to secure the Customer's right of continued use or to modify the software in order to prevent infringements of intellectual property rights or to temporarily cease the provision of the software. Any claims of the Customer are excluded if and to the extent that the infringement relates to an unauthorized modification of the software by the Customer or its other use by the Customer in violation of the provisions of these GTC or the Service Description.

8. Liability

Any liability of 1NCE for damages and/or reimbursement of expenses arising from or in connection with the contractual relationship between 1NCE and the Customer shall be subject to the following limitations:

8.1 Liability according to Section 44a TKG

a) To the extent the Services consist of the provision of publicly available telecommunications services, 1NCE as a provider of such telecommunications services shall be liable for financial losses exclusively in accordance with the provisions of Section 44a TKG.

b) The wording of Section 44a TKG is as follows (non-binding convenience translation):

Insofar as the provider of publicly available telecommunications services is obliged to compensate an end user for financial loss and such liability is not based on intent, the liability is limited to a maximum of EUR 12,500.00 per end user. If the obligation to pay damages results from a uniform act or an event causing uniform damage to several end users and this is not based on intent, the liability to pay damages is limited to a maximum of EUR 10 million, without prejudice to the limitation of liability in sentence 1. If the compensation payable to several damaged parties due to the same event exceeds such maximum limit, the compensation shall be reduced in proportion to the sum of all claims for compensation. The limitation of liability in accordance with sentences 1 to 3 shall not apply to damage claims caused by the delay in payment of damages. In deviation to sentences 1 to 3, the amount of liability towards end users who are not consumers may be regulated by individual contractual agreement.

8.2 Liability outside the scope of Section 44a TKG

Outside the scope of application of Section 44a TKG (see Section 8.1 of these GTC) 1NCE is liable as follows:

a) In the event of intent or gross negligence, assumption of a quality and/or durability guarantee or fraudulent concealment of a defect, 1NCE shall be liable in accordance with the statutory provisions.

b) In the event of slight negligence, 1NCE shall be liable without limitation in the event of injury to life, limb or health. In all other respects, 1NCE shall only be liable in the event of slight negligence if a cardinal obligation is breached and only for the foreseeable damage typical for this kind of contract. A cardinal obligation means an essential contractual obligation, the fulfilment of which is a precondition for the proper performance of the contract and upon which the Customer may regularly rely.

c) The liability for the foreseeable damage typical for this kind of contract to be compensated in the event of a breach of a cardinal obligation pursuant to lit. b) is limited to EUR 25,000.00 per damaging event and to EUR 100,000.00 for all damaging events occurring within one contract year.

d) Any strict liability without fault of 1NCE in accordance with Section 536a BGB for defects existing at the time of conclusion of the contract is excluded; the provisions of lit. a) and b) above shall remain unaffected.

8.3 Any liability pursuant to the provisions of the German Product Liability Act (Produkthaftungsgesetz) shall remain unaffected.

9. Limitations to performance obligations: Force Majeure / Reservation as to availability of supplies

9.1 Neither Party shall be liable for the fulfilment of its obligations if such fulfilment is prevented by force majeure. This includes events which are unforeseeable, irresistible and beyond the Parties' control, particularly including severe weather, flood, landslide, earthquake, storm, lightning, fire, epidemics, acts of terrorism, outbreak of military hostilities (whether or not war is declared), riot, explosions, strikes or other labour unrest, sabotage, interruptions of energy supply, expropriation by governmental authorities.

9.2 1NCE's obligation to perform is also subject to the proper and timely availability of supplies with products or advance performances provided by the suppliers of 1NCE. However, this shall be subject to 1NCE having concluded with due care a congruent covering transaction with the respective supplier and the improper or untimely supply being not attributable to a fault of 1NCE. Products or advance performances in the sense of sentence 1 shall include, but are not limited to, services or transmission lines procured by 1NCE from other suppliers of telecommunications services, supplies of hardware or software or other technical services from third parties (e.g. electricity supplies).

10. Data Protection / Confidentiality

10.1 The Parties undertake to process any personal data transferred to them by the respective other Party in the context of establishing and implementing the contractual relationship in accordance with the applicable legal provisions, in particular the provisions of the EU General Data Protection Regulation (GDPR) and the Federal Data Protection Act (Bundesdatenschutzgesetz).

10.2 The Parties also undertake to treat all other confidential information of the other Party that the receiving Party becomes aware of in connection with the contractual relationship as strictly confidential and not to disclose such information to any third party for an unlimited period.

10.3 1NCE uses the payment service provider Stripe Payments Europe Ltd, The One Building, 1 Grand Canal Street Lower, Dublin 2, Ireland (hereinafter referred to as "Stripe") for payment processing (see Sections 5.1 and 5.2 of these GTC). All (personal) data provided by the Customer during the payment process will be processed by Stripe and in some cases also be collected directly by Stripe. For further information on Stripe's data protection, the Customer may refer to Stripe's privacy policy, which is currently available at: https://stripe.com/de/privacy.

10.4 1NCE points out that it uses the usage data arising within the framework of the implementation of the contractual relationships with all customers in anonymous and aggregated form for its own statistical purposes. This is done for the purposes of network capacity planning as well as for continuous quality assurance and improvement of the services provided by 1NCE.

11. Amendment of these General Terms and Conditions

11.1 1NCE shall be entitled to unilaterally amend these GTC – to the extent they are included in the contractual relationship with the Customer – insofar as this is to be considered appropriate or necessary for adapting to a change of law or court rulings or other market conditions, in particular technical conditions.

11.2 To the extent 1NCE intends to make such an amendment to these GTC which does not exclusively relate to an adaptation to statutory law or administrative orders, 1NCE shall notify the Customer of this in text form at least six weeks before the amendment becomes effective. The Customer is entitled to terminate the contractual relationship with effect from the effective date of the relevant amendment. If the Customer does not terminate within six weeks after receipt of the amendment notification from 1NCE in text form, the relevant amendment shall become an integral part of the contract at the time it becomes effective. 1NCE shall inform the Customer of this legal consequence in the amendment notification.

12. Mandatory information under telecommunications law

12.1 Information on the procedures established by 1NCE to measure and control traffic to avoid full capacity utilization or congestion of a network connection and information on the possible effects thereof can be found on the internet at https://1nce.com/en/imprint/ (see the entry "Mandatory information under telecommunications law").

12.2 A list of measures 1NCE can take to respond to security or integrity violations or threats or vulnerabilities can be found on the internet at https://1nce.com/en/imprint/ (see the entry "Mandatory information under telecommunications law").

12.3 In the event of a dispute between the Parties about one of the cases mentioned in Section 47a TKG, the Customer may, following a prior attempt to reach an agreement with 1NCE, initiate arbitration proceedings at the Consumer Arbitration Office for Telecommunications (Verbraucherschlichtungsstelle Telekommunikation) of the Federal Network Agency (Bundesnetzagentur) in Bonn by means of an application.

12.4 The Customer may request that

a) the use of its network access for certain number ranges is blocked free of charge on the network side, to the extent this is technically possible for 1NCE; and

b) the identification of its mobile phone connection for the use and billing of a service provided in addition to the connection is blocked free of charge on the network side.

13. Final provisions

13.1 The Customer may only assign or transfer claims, rights or obligations arising out of the contractual relationship to a third party after prior consent of 1NCE in text form. Section 354a of the German Commercial Code (Handelsgesetzbuch) remains unaffected.

13.2 1NCE shall be entitled at any time to have the Services rendered in whole or in part by subcontractors. In this case, however, 1NCE fully remains responsible for the provision of the Services in relation to the Customer.

13.3 If any provision of these GTC is invalid, the remaining provisions shall remain unaffected. The invalid provision shall be replaced by the applicable statutory provisions.

13.4 The law of the Federal Republic of Germany shall apply to these GTC and all legal relations between 1NCE and the Customer, excluding the provisions of international private law which refer to another jurisdiction and the UN Convention on Contracts for the International Sale of Goods (CISG).

13.5 In business transactions with merchants, legal entities under public law or special funds under public law, Cologne, Germany, is the place of jurisdiction for all legal disputes arising out of or in connection with the contractual relationship between the Parties. A potential exclusive place of jurisdiction shall remain unaffected.

CAME

CAME BPT - North
Unit 1B
Sills Road
Willow Farm Business Park
Castle Donington
DE74 2US

Tel: 0115 921 0430

CAME BPT - South
Liberta House
Maxted Road
Maylands Ind. Est.
Hemel Hempstead
Herts
HP2 7DX

Tel: 01442 230 800

CAME BPT - Ireland
Unit 9
The Westway Centre
Ballymount
Dublin 12

Tel: +353 (0)1 450 7442

CE

© BK1800QS1021 - 2021 - EN
YOU MAY NOT EVEN PARTIALLY REPRODUCE THIS DOCUMENT
CAME RESERVES THE RIGHT TO MAKE ANY CHANGES TO THIS DOCUMENT AT ANY TIME
THE DATA AND INFORMATION SHOWN IN THIS CATALOGUE ARE SUBJECT TO CHANGE WITHOUT OBLIGATION TO GIVE PRIOR NOTICE BY CAME S.P.A, E&OE

CAME S.p.A.
Came cancelli automatici S.p.A.
is certified for Quality and Environment
UNI EN ISO 9001
UNI EN ISO 14001
BS OHSAS 18001

CAME.COM/UK